L&T Switchgear* Business IS NOW

Lauritz Knudsen#

Electrical & Automation



EXPAND YOUR REACH WITH
A COMPLETE UNIQUE ENTITY

*Under license from Larsen & Toubro Limited. | #Trademark of Schneider Electric Denmark A/S.

A Peek into the Past

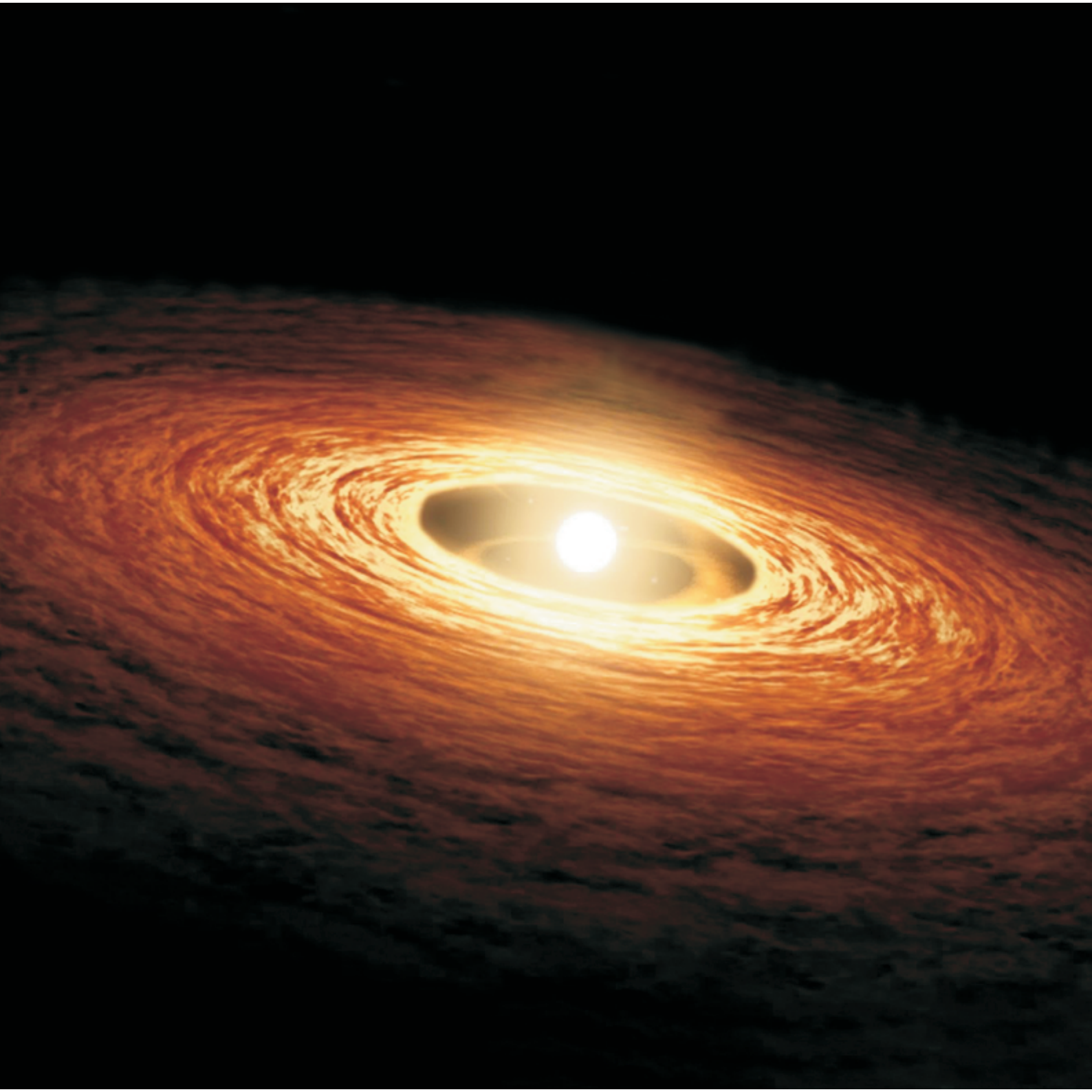

Glorious History Replete with Milestones

It all began way back in the 1960's when Electrical & Automation - Lauritz Knudsen, embarked on a momentous voyage and started its controlgear business. Right from the launch of MK series more than 50 years ago, Lauritz Knudsen has been at the forefront of controlgear product development. Over the years, this excellent range has grown in width of its offerings, size, etc.

Hence, it comes as no surprise today that Lauritz Knudsen has won the confidence and trust of millions of its customers across the globe.

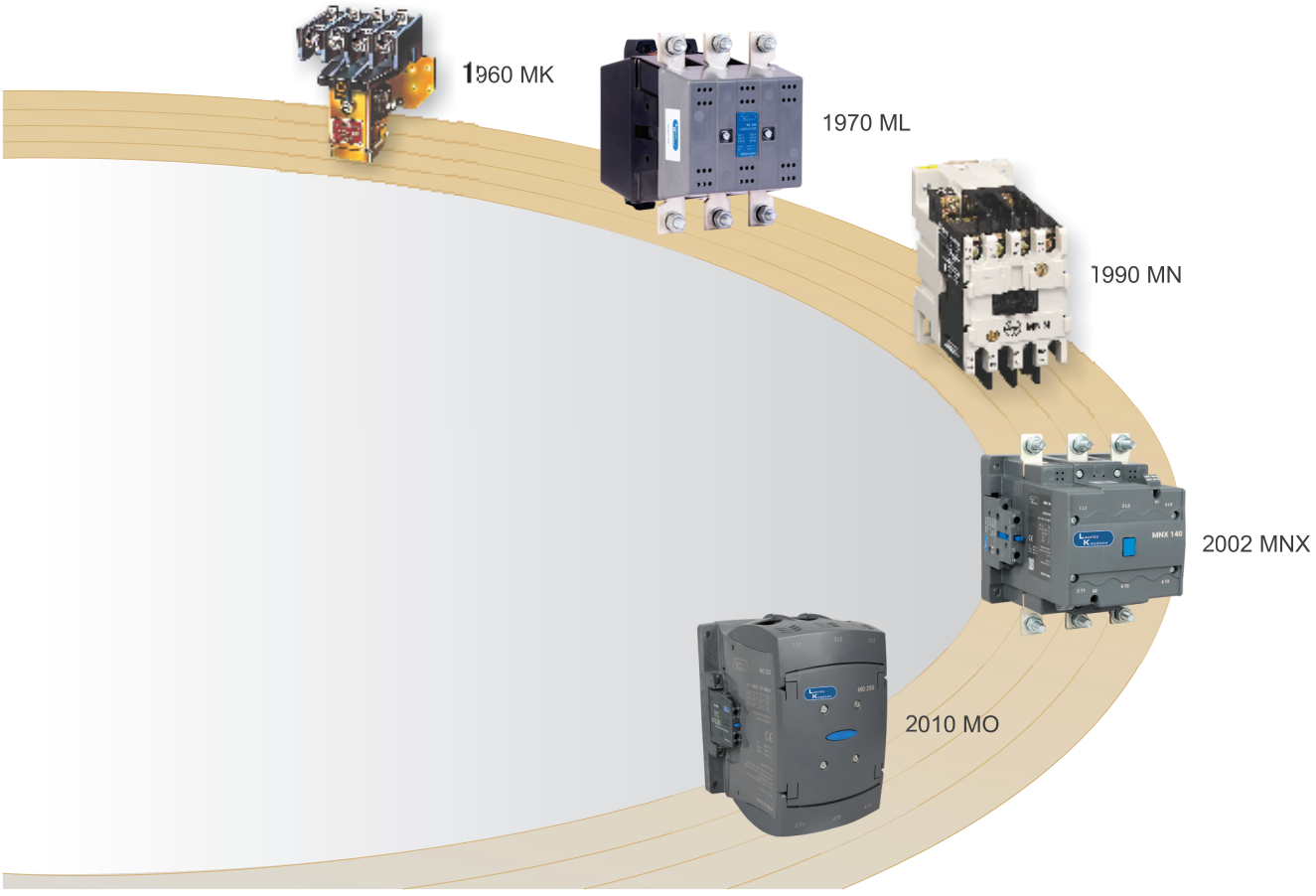

Pillars of Support

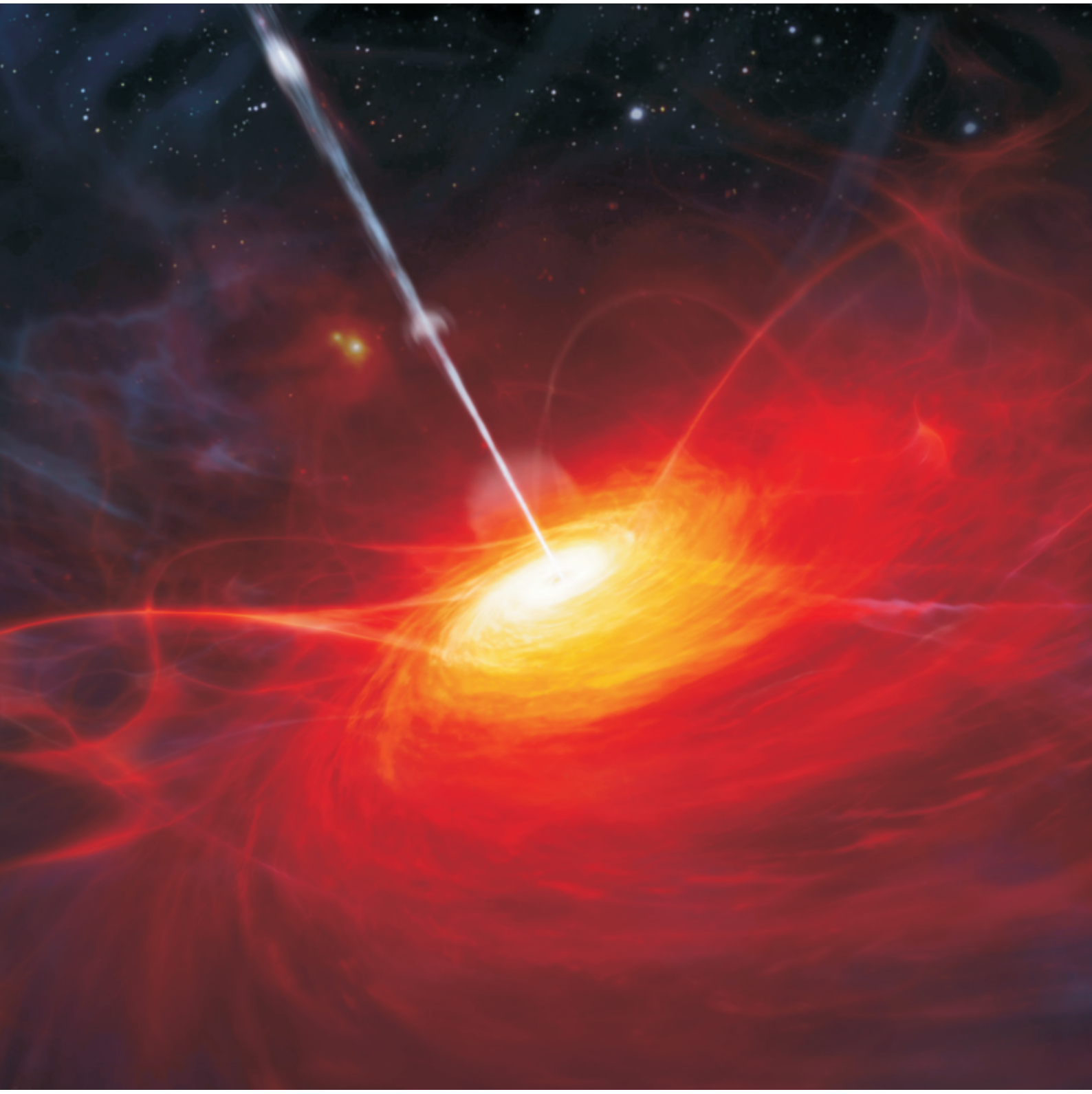

Providing Much-needed Support

Our extensive range of contactors is further augmented by our range of thermal overload relays, giving reliable protection across diverse applications. MN relays are available from 0.2 to 570A in trip class 10A and 30. Relays can be directly mounted on contactors for space-saving or through separate mounting kits, depending on the requirement. MO contactors along with RTO and REO relays, MNX contactors along with MN relays and MX contactors along with RX relays are perfect examples of these compact motor feeders.



Multi Dimensional Complete Systems



Adding Value, Assuring Results

Our wide range of accessories has been specifically designed and developed to suit diverse application requirements. From add-on blocks to surge suppressors and mechanical interlock kits to protection shrouds, you name it, we have it.

With a wide range of accessories complementing our switchgear products, our controlgear range is the most comprehensive to meet all our customer needs.



Up and Running, Always



Less Downtime, more Productivity

If downtime is not brought under control, it can spell doom for any industry. This makes reducing down time one of the most important needs of the industry. Equally significant is ease of maintenance.

Lauritz Knudsen offers a wide range of spares for its contactors, right from the lowest rating. The contactors are extremely easy to inspect and this coupled with easily replaceable coil and contacts, ensures reduction in downtime and maintenance time. In other words, one can always be assured of high levels of productivity and efficiency.

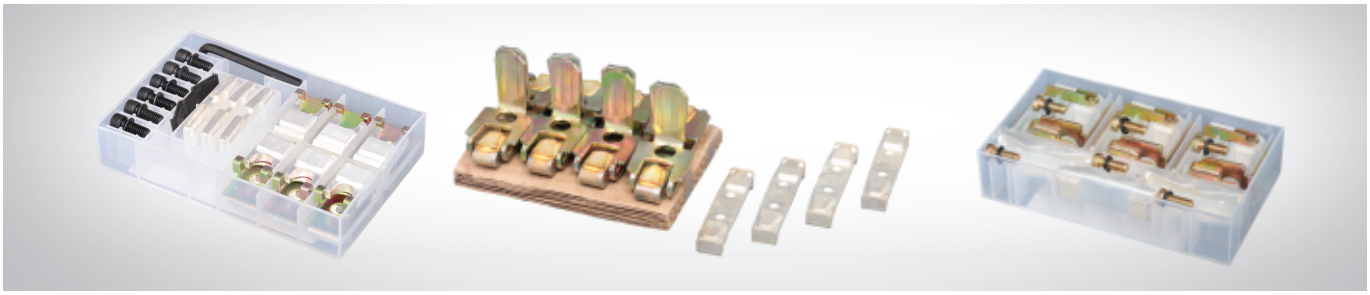

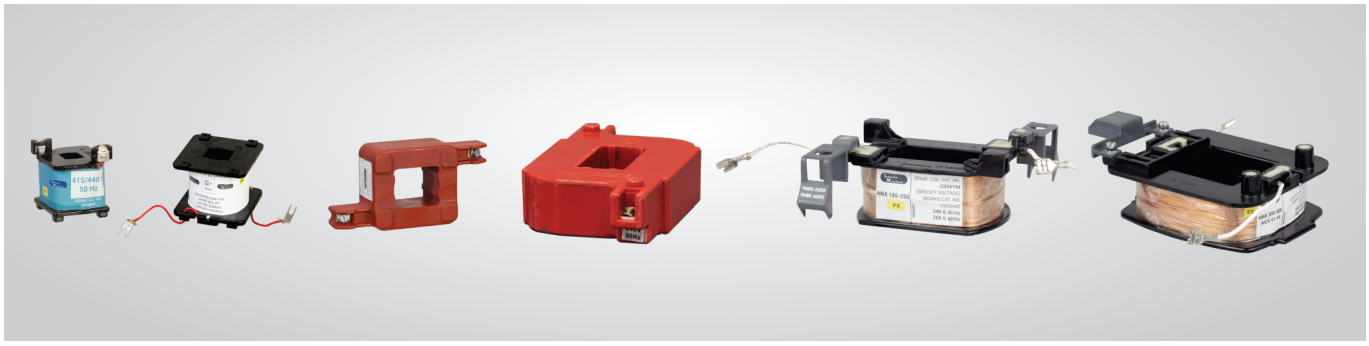

Range In One Place

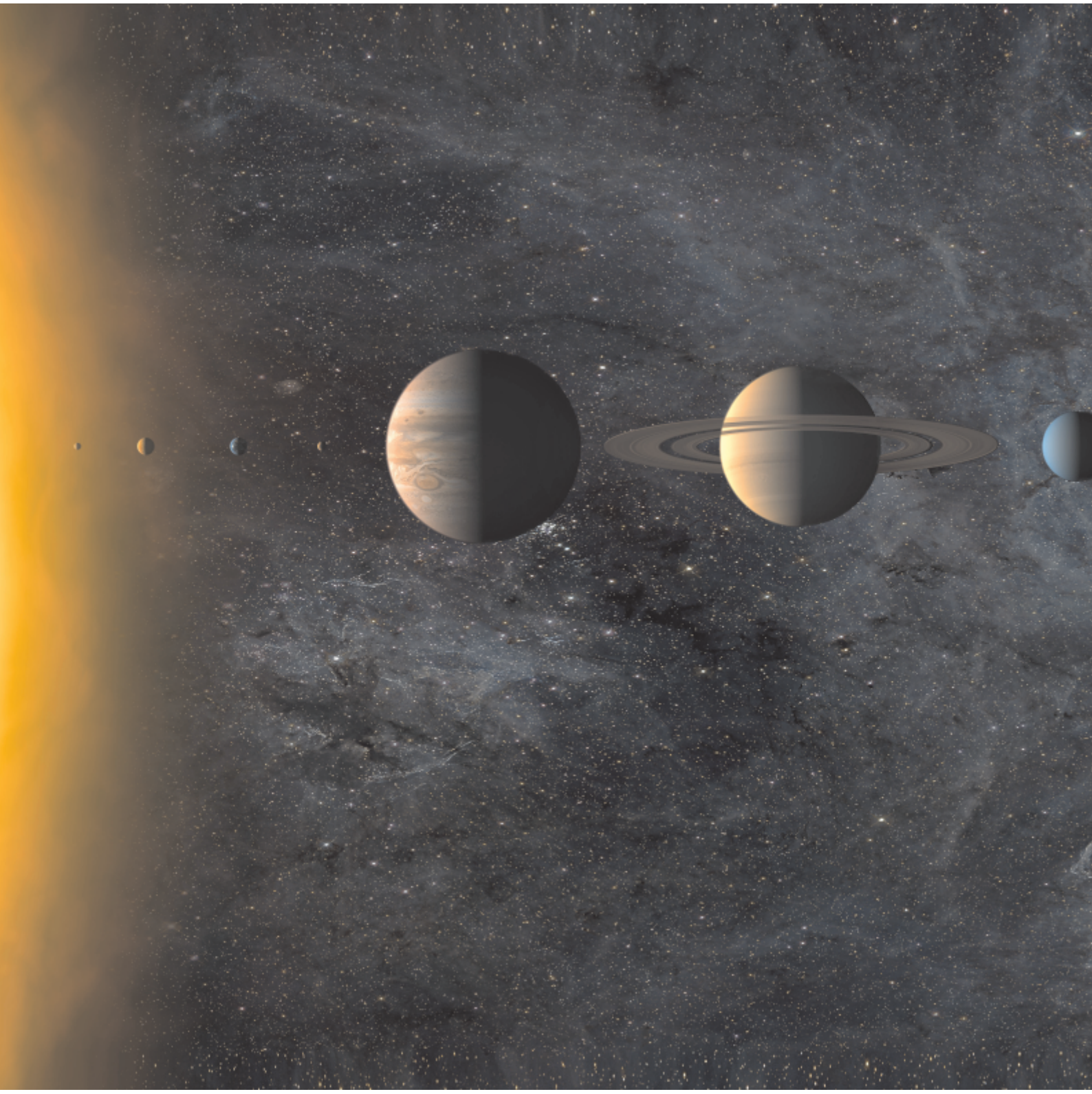

One-Stop Solution for Every Application

Industry requirements are constantly evolving and our clients' demands are ever-increasing. A scenario which may seem as a challenge to many is seen by us as an opportunity to learn and grow. An opportunity to excel in our commitments and exceed customer expectations.

Due to our thorough understanding and in-depth knowledge of customer requirements, we make sure that our extensive range of contactors caters to every single customer need. Our contactors are well suited for varied applications such as motor control, capacitor duty switching, single phase applications, supply changeover and many more. In short, we are a one-stop solution for every application.



The comprehensive range of controlgear products from Lauritz Knudsen Electrical & Automation is your key to meet every demand and suit every requirement across diverse applications.

Whether it is motor control, capacitor switching, supply changeover or any other single phase or three phase application, you can always be assured of finding a perfect solution in our extensive range of contactors.

Thermal overload relays with their sensitive mechanism ensure that your system is protected against overloads. Manual Motor Starter combine both overload and short circuit protection In a single compact solution.

To complement these products, we also have a wide range of accessories and spares to ensure that support is always at hand. In other words, our controlgear range is a one-stop solution for every application.



Contents

Application Notes	1
MO 3 Pole Power Contactors	37
RTO Thermal Overload Relays	69
MNX 2&3 Pole Power Contactors	85
MN Thermal Overload Relays	111
MDX DC Coil 3 Pole Power Contactors	117
ML 3 Pole Power Contactors	127
MX Mini Contactors & Thermal Overload	135
MCX 4 Pole Power Contactors	143
MO C Capacitor Duty Contactors	163
MO 0 Control Contactors	177
Electronic Coil Contactor Range	183
MR Single pole Contactors	185
MU - 2P 2 Pole Contactors	189

Contents

Motor Protection Relay 195

REO Electronic Relay

MPR200nX/MPR300

MM 10 Relay

iMMR Relay

MOG Manual Motor Starter 213

MN Industrial Starter 235

Standards & Approvals



Controlgear range comply with the following standards

IEC 60947-1, EN 60947-1, IS/IEC 60947-1
Low-voltage switchgear and controlgear, Part 1: General Rules

IEC 60947-4, EN 60947-4, IS/IEC 60947-4
Low-voltage switchgear and controlgear , Part 4: Contractors & Motor starters

Third party certificates (ERDA / CPRI) available for Controlgear Product



NABL

NABL accreditation is a formal recognition of the technical competence of testing, calibration or medical laboratory for a specific task following ISO/IEC 17025:2005 Standard. Accredited laboratories have the responsibility of satisfying the criteria of laboratory accreditation at all times, which are verified during Surveillance and Reas sessment visits by NABL. Further the accredited laboratories should prove their echnical competence by satisfactory participation in recognized Proficiency Testing Programmes.

Lauritz Knudsen's Switchgear Testing Lab is NABL accredited subject to continued satis factory compliance to above standard & additional requirements of NABL.

The Product are tested in Lauritz Knudsen's NABL accredited Switchgear Testing Lab Controlgear



CE Marking

A CE marking is a European marking of conformity that indicates a product complies with the essential requirements of the applicable European laws or directives with respect to safety, health and environment and consumer protection. Generally, this conformity to the applicable directives is done through self-declaration and is require don products in the countries of the European Economic Area (EEA) to facilitate trade among the member countries. The manufacturer or their authorized representative established in the EEA is responsible for affixing the CE marking to their product. The CE marking provides a means for a manufacturer to demonstrate that a product complies with a common set of laws required by all countries in the EEA to allow free movement of trade within the EEA countries.

Lauritz Knudsen's conform to the Low voltage directive 73/23/EEC as amended by directive 93/68/EEC, provided it is used in the application for which it is made and is installed and maintained in accordance with professional practices with relevant installation standards and operating instructions. Controlgear range

RoHS Compliance

As a green initiatives, Lauritz Knudsen Electrical & Automation understands the requirements of the RoHS directive. The directive restricts the use of hazardous substances in electrical and electronic equipment and bans electrical equipment containing more than permitted levels of lead, cadmium, mercury, hexavalent chromium, polybrominated biphenyl (PBS) and polybrominated diphenyl ether (PBDE) flame retardants.

Our comprehensive library of Application notes will help you optimize your selection of Controlgear products. These include short technical notes giving a brief description of a specific development, technique or procedure and it will guide for specific switchgear selection for different applications. The main criteria for publication will be the novelty of concepts involved, the validity of the technique and its potential for such applications.

TITLE AND PAGE NUMBER AS PER XTRA PAGE

Utilization Categories	1
Co-ordination under Short-circuit conditions	4
Standard Coil Voltages and their Applications	7
Importance of using Surge Suppressor	9
Contactor selection for 60 Hz control supply applications	13
Selection of Contactors for AC-4 (Crane Duty) Applications	15
Contactor Selection for Motor with long starting time	18
Control Transformer sizing for contactor actuation	21
Application Guide for Reduced Voltage Autotransformer Starter	27
Length of control cables	31
Detailed Selection guide for lightening circuit	34



Utilization categories

Contactors are most commonly used in applications concerning control of electric motors. They are used to start, stop, reverse, jog and plug the motors depending upon the application requirement. Contactors along with thermal overload relays also provide protection to the motor against overloads.

The most basic data required for contactor selection is the motor HP rating and it's rated current. However this data is alone not sufficient. The type of load, duty cycle of the load, switching frequency are some of the factors that influence contactor selection. The switching capability of contactors is majorly dependent on the type of application, and hence international standards (IEC 60947-4-1) specify utilization categories which cover a broad range of applications. These utilization categories and the data associated with them are used by manufacturers to establish contactor ratings.

The utilization categories as per IEC 60947-4-1 are as follow

Kind of Current	Utilization Categories	Additional Category Designation	Typical Load
AC	AC - 1	General use	Non-inductive or slightly inductive loads
	AC - 2		Slip-ring motors or mixed resistive and inductive loads, including moderate overloads
	AC - 3		Squirrel-cage motors : starting, switching off motors during running, reversing
	AC - 3e		Squirrel-cage motors with higher locked rotor current : starting, switching off motors during running, reversing
	AC - 4		Squirrel-cage motors d: starting, plugging, inching
	AC - 5a	Ballast	Discharge lamps
	AC - 5b	Incandescent	AC incandescent lamps
	AC - 6a		Transformers
	AC - 6b		Capacitor banks
	AC - 7a		Slightly inductive loads for household appliances and similar applications
	AC - 7b		Motor-loads for household applications
	AC - 8a		Hermetic refrigerant compressor motor control with manual resetting of overload releases
	AC - 8b		Hermetic refrigerant compressor motor control with automatic resetting of overload releases
	AC - 15		Control of AC electromagnetic loads
DC	DC - 1		Non-inductive or slightly inductive loads
	DC - 3		Shunt-motors: starting, plugging, inching, dynamic breaking of DC motors
	DC - 5		Series-motors: starting, plugging, inching, dynamic breaking of DC motors
	DC - 6	Incandescent	DC incandescent lamps
	DC - 13		Control of DC electromagnetic loads

MO platform provides switching solutions for all utilization categories mentioned above.

AC-1
Contactors with an AC-1 rating are intended for applications involving switching of non-inductive or slightly inductive loads. Heating, lighting, switching of power supply in a power panel etc are some of the examples of AC-1 loads.

AC-2
Contactors with an AC-2 rating are intended for applications involving switching of Slip-ring motors or mixed resistive and inductive loads, including moderate overloads. Some cranes use slip-ring motors.

AC-3
Contactors with an AC-3 rating are intended for switching of Squirrel-cage motors. The contactor must withstand the high starting current of the motor during making. The breaking will be at rated current of motor during running condition. These contactors can also be used in reversing applications. AC-3 category may be used for occasional inching (jogging) or plugging for limited time periods such as machine set-up. During these limited time periods, the number of such operations should not exceed 5 per minute or more than 10 in a ten minute period. Some examples of this application are Compressors, Pumps, Fans, Conveyors, Mixers, Agitators, Air conditioners, Elevators etc

Utilization categories

AC-3e
Contactors with an AC-3e rating are intended for switching of high efficiency Squirrel-cage motors. The contactor must withstand higher locked rotor current of Squirrel-cage motors as compared to motors in AC-3 applications.

AC-4
Contactors with an AC-4 rating are intended for switching of Squirrel-cage motors. The contactor must withstand the high starting current of the motor during making. The breaking will also be at high starting current of motor as it is used in inching or plugging applications. Some examples of this application are Printing presses, Wire drawing machines, Centrifuges etc

Utilization categories most encountered in contactor applications are AC-3 and AC-4

The making and breaking capacities of contactors are dependent on the utilization categories and the standard specifies that the contactors or starters shall be capable of making and breaking currents without failure under the conditions stated.

The conditions are as given below,

Table (a):

Normal Operation						
Utilization categories	**Making Conditions**			**Breaking Conditions**		
	I_c / I_e	U_r / U_e	cosØ	I/I_e	U/U_e	cosØ
AC - 1	1	1	0.8	1	1	0.95
AC - 2	2.5	1	0.65	2.5	1	0.65
AC - 3 / AC - 3e	6	1	1)	1	0.17	1)
AC - 4	6	1	1)	6	1	1)

1) For Ie < 17A cos Ø = 0.65, For Ie>17A cos Ø = 0.35

Table (b):

Occasional Operation (50 Operating cycles)						
Utilization categories	**Making Conditions**			**Breaking Conditions**		
	I_c / I_e	U_r / U_e	cosØ	I/I_e	U/U_e	cosØ
AC - 1	1.5	1.05	0.8	1.5	1.05	0.8
AC - 2	4	1.05	0.65	4	1.05	0.65
AC - 3	10	1.05	1)	8	1.05	1)
AC - 3e	13	1.05	1)	8.5	1.05	1)
AC - 4	12	1.05	1)	10	1.05	1)

1) For 17A < Ie < 100A cos Ø = 0.45, For Ie > 100A cos Ø = 0.35

Where;

I_e = Rated Operational Current
U_e = Rated Operational Voltage
U_r = Recovery Voltage
I_c = making and breaking current

Selection Criteria

The starting current of a squirrel cage induction motor is 6 times while that of slip ring induction motor is 2.5 times the rated current. Starting current in slip ring induction motor is less because of the higher rotor resistance in the rotor circuit, which can be effectively removed in steps as the motor attains its rated speed.

From the above **Table (a)** it can be seen that, for AC-3 / AC-3e utilization category during normal operation the contactor must be capable of making 6 times the rated current. The current that contactor must break, however remains the rated current. This is because the AC-3 / AC-3e utilization category specifies that the motor is switched off after it starts running.

In the case of AC-4 utilization category, the current, the contactor must be capable of making as well as breaking remains 6 times the rated current. This is because AC-4 utilization category involves plugging and inching operations, in which the motor is switched on and off frequently.

Hence it can be concluded that AC-4 utilization category is more severe than AC-3 / AC-3e and the switching capability of contactors (Operating cycles/Hr) for AC-4 is lower than that of AC-3 / AC-3e.

Table (b) specifies the values of currents the contactor must be capable of making or breaking under abnormal conditions which occur occasionally. Here also it can be concluded that AC-4 utilization category is the most severe among all the other utilization categories.

Also it can be seen that making and breaking capacities for AC-4 category is more than that of AC-3 / AC-3e, clearly highlighting that AC-4 is severe than AC-3 / AC-3e.

Utilization categories

Selection Example

Contactor must be selected such that the making and breaking capacities during both normal as well as abnormal conditions must be within contactor making and breaking capacity.

Consider a 10 HP squirrel cage Induction motor with Direct On-Line (DOL) starting.
Rated Current of the motor In = 15A

Motor Operation in AC-3 Utilization category

- Normal Operation
  - » Making current of the contactor = 6In = 90A
  - » Breaking current of the contactor = In = 15A
- Abnormal operation
  - » Making current of the contactor = 13In = 195A
  - » Breaking current of the contactor = 8.5In = 127.5A

Motor Operation in AC-4 Utilization category

- Normal Operation
  - » Making current of the contactor = 6In = 90A
  - » Breaking current of the contactor = 6In = 90A
- Abnormal operation
  - » Making current of the contactor = 12In = 180A
  - » Breaking current of the contactor = 10In = 150A

Hence, in both cases, we can select MO18 which has Rated Current of 18A, Making Capacity of 450A and Breaking Capacity of 350A which is higher than the abnormal making and breaking currents calculated above.

Utilization categories

AC-5A
Contactors with an AC-5A rating are intended for applications involving the direct control of electric discharge lamps or other non-motor loads. These contactors are engineered to handle the unique characteristics of inductive loads associated with lighting systems, such as ballasts.

AC-5B
The AC-5B rating for contactors designates their suitability for applications involving the direct control of incandescent lamps.

AC-6A
Contactors with AC-6a rating can be used for switching transformers. Such contactors require high inrush current withstand capability as such currents are expected when switching transformer.

AC-6b
Contactors with AC-6b rating are intended for switching capacitor banks. As there is very high switching surge during switching of capacitors, the contactors are fitted with early make contacts along with current limiting resistors to limit the surge current. Capacitor duty contactors with such resistor blocks have been developed in the MO platform. They are called MOC contactors. Ac-6b rating are available in technical specifications of MOC capacitor duty contactors.

AC-7a
Contactors with AC-7a ratings can be used for slightly inductive loads for household appliances and similar applications. Modular contactors with AC-7a utilization categories are available.

AC-7b
Contactors with AC-7b ratings can be used for Motor-loads for household applications. Modular contactors with AC-7b utilization categories are available.

AC-8A
This category is specifically for contactors designed for use in Hermetic refrigerant compressor motor control with manual resetting overloads. A hermetic refrigerant compressor motor is a combination consisting of a compressor and a motor, both of which are enclosed in the same housing, with no external shaft or shaft seals, the motor operating in the refrigerant.

AC-8B
This category is for contactors used in Hermetic refrigerant compressor motor control with automatic resetting overloads.

These utilization categories help in the selection and application of contactors based on the specific nature of the load and the operational requirements, ensuring that the contactors are appropriately matched to the intended use, thus promoting safety and optimal performance.

Understanding these ratings is crucial for selecting the right contactor for an application, as it ensures that the contactor can handle the specific electrical loads and operational conditions it will encounter.

Rating	AC-1 (A)	AC-2 (A)	AC-3 (A)	AC-3e (A)	AC-4 (A)	AC-5a (A)	AC-5b (A)	AC-6a (A)	AC-8a (A)	AC-8b (A)
MO 9	30	9	9	9	9	9	9	4	12	11.5
MO 12	32	12	12	12	12	12	12	5	16	15.5
MO 18	32	18	18	18	18	18	18	8	22	23.5
MO 25	45	25	25	25	25	25	25	11	30	32.5
MO 32	50	32	32	32	32	32	32	14	40	41.5
MO 40	50	40	40	40	40	40	40	18	50	52
MO 45	50	45	45	45	45	45	45	20	55	58.5
MO 50	100	50	50	50	50	50	50	22	63	65
MO 60	100	60	60	60	60	60	60	26	73	78
MO 70	100	70	70	70	70	70	70	30	85	91
MO 80	125	80	80	80	80	80	80	35	95	104
MO 95	125	95	95	95	95	95	95	42	120	123.5
MO 110	140	110	110	110	110	110	110	50	140	143
MO 140	250	140	140	140	140	140	140	63	165	182
MO 185	275	185	185	185	185	185	185	83	220	240.5
MO 225	275	225	225	225	225	225	225	101	270	292.5
MO 250	400	250	250	250	250	250	250	113	300	325
MO 300	500	300	300	300	300	300	300	135	360	390

All the above ratings are at operational voltage of 415V.
AC-15 and DC-13 ratings are available in technical specifications of MO0 control contactors.
Modular contactors with AC-7a and AC-7b utilization categories are also available.

Co-ordination under short-circuit conditions

Motors are the backbone of the industry. Their use is also increasing in commercial establishments. Hence, Protection of motor is extremely important so as to keep these processes functioning safely and continuously.

The main purpose of motor protection system is to prevent excessive temperature built up in the windings because of over-current and short-circuit current. Following are the reasons for over-current.

- Overloading.
- Singlephasing.
- Over-voltage.

IEC 60947-4-1:2023 require that the thermal overload relay and SCPD are co-ordinated to ensure that they operate satisfactorily under all load and fault conditions. Following aspects need to be considered to achieve proper co-ordination.

- Discrimination between thermal overload relay & SCPD.
- Adequacy of short circuit protection.

What is co-ordination?

Co-ordination means matching the characteristics of SCPD and down stream equipment to ensure that the let-through energy and peak cut-off current do not rise above the levels that the circuit can withstand.

Improper co-ordination can lead to

- High electro-dynamic force (magnetic force $\propto$ $Ipeak^2$).
- High thermal stress leads to excessive heat (I^2t let-through).
- Nuisance tripping/operation of SCPD under small overloads, leading to reduced life of SCPD.
- Nuisance tripping of SCPD during motor starting.
- Nuisance tripping of SCPD during transient conditions like open transition star delta starter starting.

As per the standard two types of co-ordination are permissible, Type “1” and “2”.

Type “1” co-ordination requires that under short-circuit conditions, the contactor or the starter shall cause no danger to persons or installation. The motor feeder may not be suitable for further service without repair and replacement of parts (Not remaining suitable is NOT a requirement and hence you may find separating in a different sentence could avoid possibility of misconception)

Type “2” co-ordination requires that under short-circuit conditions, the contactor or the starter shall cause no danger to persons or installation and shall be suitable for further use. However contact welding is recognized. Also the time-current characteristics of the over load protection device should not change. This in other words means safety, low down time and continued protection.

Recommended combination needs to be proven through short-circuit tests at

- Prospective current “r”
- Conditional short-circuit current Iq.

Test at Prospective current “r” is done to verify the performance under fault conditions practically possible at the motor feeder end. These faults are normally associated with the motor and the associated feeder. Prospective current “r” is specified according to the rated operational current (Ie, AC-3) of the feeder. If the motor feeder is not specified according to utilization category AC-3, the prospective current “r” shall correspond to the highest rated operational current for any utilization category claimed by the manufacturer. The values are mentioned below.

The values are mentioned below.

Value of the prospective test current according to the rated operational current

Rated operational current Ie (A)	Prospective current "r" (kA)
Ie <= 12	1
12 < Ie <= 50	3
50 < Ie <= 100	5
100 < Ie <= 250	10
250 <Ie <= 500	18
500 < Ie <= 800	30
800 < Ie <= 1300	42
1300 < Ie	Subject to agreement between manufacturer and user.

Co-ordination under short-circuit conditions

Test at Conditional short-circuit current Iq is carried out to verify the performance under system level faults.Iq is declared by the manufacturer. This is the maximum fault current that the feeder can withstand. Generally the declared value of Iq is 50 kA.

Trends in motor feeder protection

- Fuse protection with S-D-F
- Fuseless protection with MCCB and MMS

S-D-F, which incorporates H.R.C fuses, is the most efficient and popular in the industry. S-D-F, like conventionalfuse-switch units, is capable of switching and protecting electrical circuits. In addition these are also suitable for isolating down stream equipment. MCCB was primarily used for protection of distribution circuits. However, with the development of current limiting MCCBs, it has become possible to employ MCCBs in motor feeders also. With the availability of various accessories, MCCB as SCPD offers several advantages.

MMS can be used in two ways. It can be used directly for switching of a motor. This is very cost effective.However downside is limited electrical life of MMS compared to that of a contactor. Moreover, a separate undervoltage protection is required. Alternately, MMS can be used along with a contactor. Since, MMS combines thermal as well as short circuit protection, it will trip and interrupt even small overloads (which otherwise could be interrupted by a contactor).

Typical DOL Motor Feeder with S-D-F

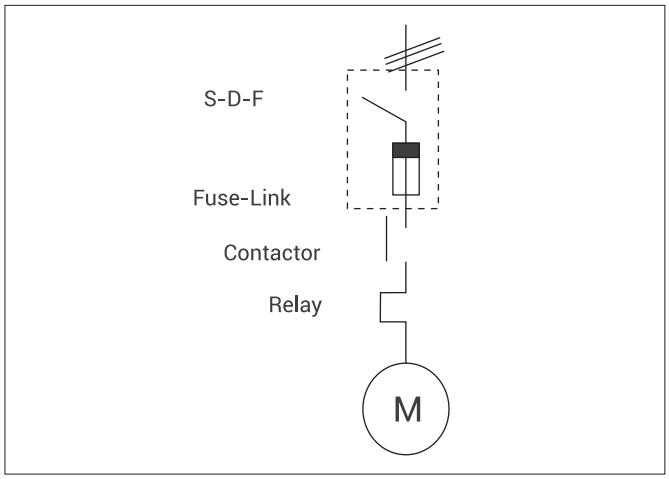

Co-Ordination with S-D-F

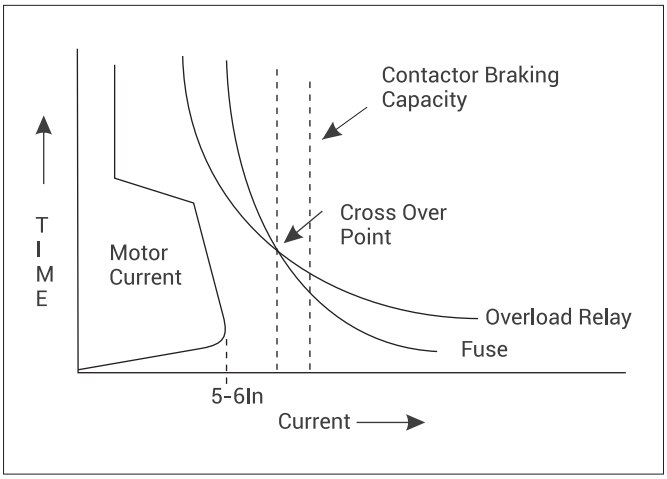

Typical DOL Motor Feeder with MCCB

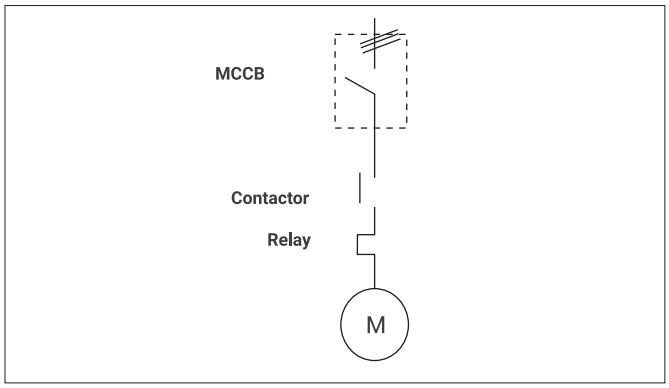

Co-ordination with MCCB

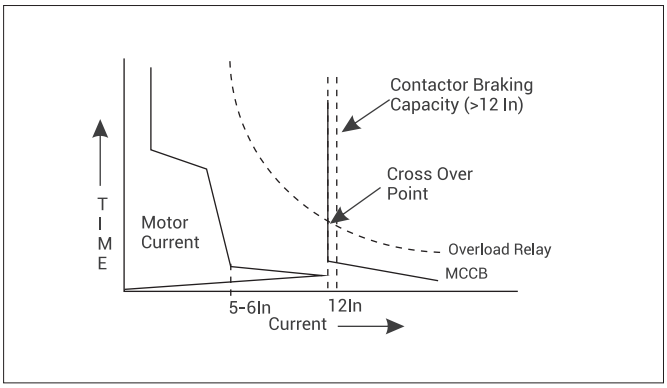

Co-ordination under short-circuit conditions

Typical DOL Motor Feeder with MMS

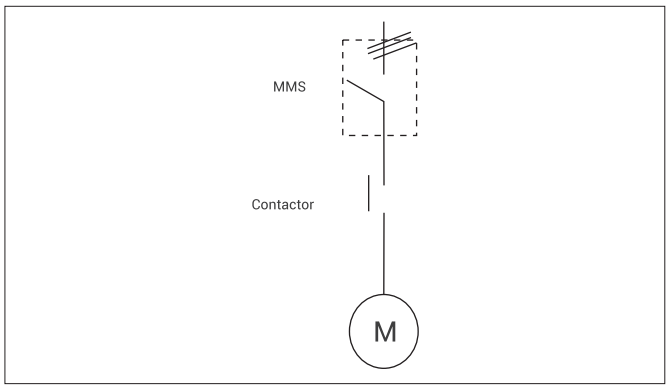

Co-ordination with MMS

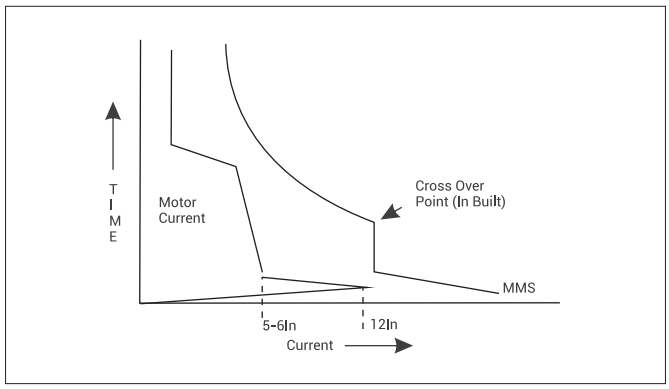

Open and Close Transition Star-Delta Starting

For Star-Delta motor feeders, the motor winding is connected in star. When it reaches a certain speed the motor winding connection is changed to delta. In case of Open transition from star to delta, there is some time difference between opening of the star contactor and closing of the delta contactor. During this period there is no voltage across the motor terminal and the motor will momentarily act as a generator. When the delta contactor closes, full line voltage appears across the motor terminal. If the motor emf and the line voltage add up, the transient current peaks may reach up to 18In. Also the motor will experience a jerk, which in some cases may be critical.

In case of open transition star-delta starting (most common practice), it's an established fact that the transient current peaks during change-over from star to delta are in the order of 18 times the line current (In). As the maximum magnetic threshold of a MMS is 14In and as it is a current peak sensing device, such conditions will definitely lead to nuisance tripping of MMSs during change-over from star to delta mode. Both the above facts i.e. 18 times transient peak and nuisance tripping of MMS have been verified through inhouse tests as well.

Hence, to avoid nuisance tripping, it is technically correct to increase the MMS rating for star/delta starting so that the ratio of instantaneous release setting to the motor full load current is at least 18. However, this will lead to loss in thermal overload protection offered by the MMS (as the MMS rating will be higher than the full load current of the motor). This aspect can be addressed by providing an additional thermal overload relay in the phase circuit.

In case of close transition, the change over from star to delta will take place through three resistors. These resistors do not allow full line voltage to appear across the motor terminal and also there will be no break in the supply to the motor. Hence, there will be no jerk to the motor and transient current peaks will also get eliminated.

Summarising

Effective motor protection should protect motor and the associated feeder against any overcurrent including short circuit current. More and more users demand Type '2' coordination because it helps to ensure a safe working environment. In view of down times and maintenance costs, though Type '2' co-ordination has higher initial costs, in the long term will prove economical. Manufacturer having all the products in its product portfolio is better place to recommend the combinations for proper Type '2' co-ordination.

Standard Coil Voltages and their Applications

Standard Coil Voltage Ratings used in India

240V

Coils with rated voltage of 240V are the most widely used coils in Industrial and commercial applications. 240V single phase-neutral supply can be easily derived from a 415V Three Phase Four Wire system by connecting across one phase and neutral point (415/√3=240). Since this distribution system is prevalent across many industrial applications, 240V coils find their application in majority of contactor applications. Common applications are industrial motor feeder systems. Also, in most of the industrial installations voltage values are quite stable and variations are limited. Hence in such systems with very less voltage fluctuations, it is viable to go for 240V coil with a standard coil band of 80% to 110% of rated coil voltage.

220V

220V coils are generally preferred in applications where the available supply is slightly less than the rated voltage of 240V. In such applications it is advisable to go for a 220V coil because one gets a lower value of pick up voltage as compared to 240V. For example for a 240V coil the coil band would be 156 - 288V. If one goes for a 220V coil then the available coil band is 143 - 264V. This takes care of the slight fluctuation in voltage which is below the band specified for 240V or a consistent low voltage.

415V

415V coils are used when there is a possibility of neutral floating condition affecting contactor operation. Neutral floating arises when the neutral is not properly grounded or ground connection is completely broken. Conventional distribution systems are three phase four wire systems in which individual single phase systems are derived from a three phase supply. In such cases the neutral is grounded and ideally must be at zero potential. In a perfectly balanced three phase four wire systems, loss of neutral conductor will not cause any abnormal voltage variation on connected single phase loads. However this condition is extremely rare and there is always some current flowing through the neutral owing to imbalances in the single phase loads. In such a scenario a loss of neutral will lead to abnormal voltage variations across the connected single phase loads. The extent of voltage variation will depend on the extent of unbalance in the single phase loads. However the imbalance in voltages will not affect the line voltages and they will continue to be at 415V.

In such a scenario if one used 240V coils then they may get damaged due to over voltage condition arising out of neutral floating. This problem can be efficiently eliminated by going for 415V coils as neutral floating condition does not affect the line voltages. Hence the issue of coil burning due to neutral floating is completely eliminated. Improper neutral grounding can lead to voltage rise and hence going for 415V coils is advisable.

Hence for all changeover application involving four Pole contactors (MCX Range) it is recommended to go for 415V coils. But, it should be noted that the allowable control cable length due to cable capacitance is lowest at 415V. (Refer application note: Guidelines on control cable lengths dated 12/07/2012)

360 or 380V

These coil voltages are mainly used in agricultural applications. In agriculture applications even though the rated secondary of transformer is 415V, because of simultaneous running of loads leading to sustained voltage drop and absence of voltage stablilizers, many of the users get voltages in the range of 360-380V. Since this voltage levels are much lower than 415V special coils of 360 or 380 volts have to be designed specifically for agricultural applications. These coils are restricted to applications where it is known that reduced voltage is available. These coils don't find their applications in industrial applications where voltage supply is as per rated and stable. The choice of 360V and 380V coils can be based on how low the supply voltage can dip to in that particular installation. It is also to be noted that in such installation Phase to neutral voltage connection is not preferred for coil voltages, due to the possible problem of neutral floating.

Standard Coil Voltages and their Applications

440V

These coil voltages are mainly used in Industrial applications, and there are chances of failure of coils due to sustained high voltages These coils are restricted to applications where it is known that higher voltage is available. These coils don't find their applications in industrial applications where voltage supply is rated and stable.

110V

110V coils are generally used in applications where one wants to prevent any unauthorized start of the contactor. For example in many applications, operating personnel tend to override the contactor drop command given by a Distributed control system (DCS). This is mainly done by using easily available 240V single phase supply to on the contactor. However if one uses 110V coils, it acts as an efficient deterrent against overriding DCS commands as 240V supply to an 110V coil will damage the coil beyond repair. This acts as an efficient safety feature in the system. It also efficiently isolates the coil supply from the main supply through a control transformer. 110V 60Hz supply is also used mainly in western countries as 110V is much safer to operating personnel as compared to 240V.

Also it should be noted that the allowable control cable length due to cable capacitance is highest at 110V. (Refer application note: Guidelines on control cable lengths dated 12/07/2012)

24V DC

24V DC coils are mainly used in automation applications and in contactors which are used along with backup supplies. In many process industries having the entire control through PLC one finds applications of 24V DC coil contactors as 24V DC is predominantly required for PLC. Some of the contactors have low coil consumption coils and can be directly actuated by the PLC without the use of an interface relay. PLC output, generally being 24V DC, DC coil voltage is required. 24V DC Coils are also largely used in battery backed up systems and UPS applications. For example, in power plant a lot of critical equipment is kept on backup supply where actuation is done through a DC coil contactor, 24 V DC being the most widely used.

Coil Voltage	Application	Caution
240V AC	Most commonly used coil voltage	Limitation where pickup at low voltage is required
220V AC	Used where voltage fluctuation on lower side. Can pick up at lower voltage	Overvoltage withstand will be limited as band shifts to lower side
415V AC	Ideal for DG applications, there is a chance of neutral floating	Allowable control cable length reduces
360 or 380V AC	To be used in agricultural applications, where undervoltage is prevalent	Overvoltage withstand will be limited as band shifts to lower side
440V AC	Used where voltage fluctuation on higher side. Better withstand at sustained high voltage	Pick up at lower side gets limited as band shifts to higher side
110V AC	Provides separation between control voltage and common available single phase supply.	Separate control transformer is needed which makes it expensive
24V DC	Used in PLC applications or Automation systems, Eliminates need for interposing relay	Expensive due to high cost of DC Coils and limitations of NC contacts

Importance of using Surge Suppressor

Cause of voltage surges in the system

Surge Suppressors are mainly used to suppress the voltage spikes or surges that occur whenever any inductive load is de-energized.

A general schematic of a contactor and load is shown below. The contactor is operated by an electromagnetic coil which is energized to close the contacts and de-energized to open them.

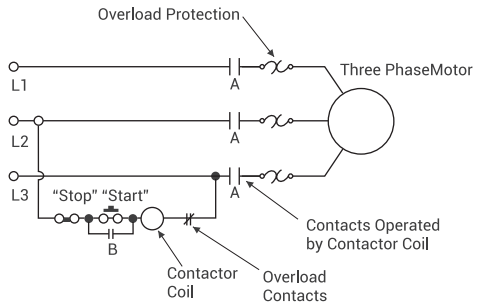



When the coil is de-energized its electromagnetic field collapses and being an inductive load it opposes this sudden change by producing an Electromotive Force (EMF) given by,

$$E = L \frac{di}{dt}$$

This is because the absolute change in current is very high and in a short duration of time. This coupled with high inductance of the coil produces a voltage spike in the system. This voltage spike is of the order 8 to 10 times of the rated coil voltage i.e. for a coil of rated voltage 240V AC the voltage surge can reach a value of around 2kV.

A typical surge characteristic is shown below,

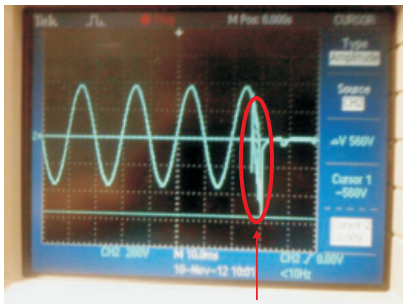

Contactor switched off

Effects of voltage surges on the system

This voltage spike generated in the system has the potential to propagate to other components connected to the same supply system. If the surge is not suppressed on time it will damage any sensitive electronic components connected to the system.

Also if any counters or logic circuits are present in the system then the voltage spike will cause them to change state momentarily, giving erroneous outputs. It may also damage the ICs beyond repair.

Hence it is very much imperative that the voltage spike is effectively dampened by absorbing the energy associated with it. This is where a surge suppressor comes into the picture.

Importance of using Surge Suppressor

Mitigating Voltage Surges

As we have seen above it is very necessary to clamp down the voltage spike as it produces damaging effects for electronic components in the system.

A surge suppressor is a device which is connected in parallel with the coil. During normal operation the suppressor does not conduct as the supply voltage is much below its breakdown voltage. When a switching surge is generated the device starts conducting providing a parallel path to the excess current. This prevents the surge from propagating in the system and at the same time the spike is effectively suppressed. The device then automatically resets when the overvoltage goes away. This can be clearly understood by the schematic given below,

In the normal mode, the device being protected doesn't experience voltage or current surge eventsso the ideal protection device remains open.
If there is a voltage or current surge, the ideal protection device becomes a perfect short-circuit path to ground to protect the load.
Just as de-energization of contactor coil produces a voltage spike, external voltage surges in the system can also be damaging to the coil. In case of electronic coils like those in MNX 550-650 & MCX 45/46/47, And Universal AC/DC wide band coils of MO 140 - 300 external surges in the system may also damage the sensitive electronic components. In such cases a surge suppressor also protects the coil from external voltage surges.

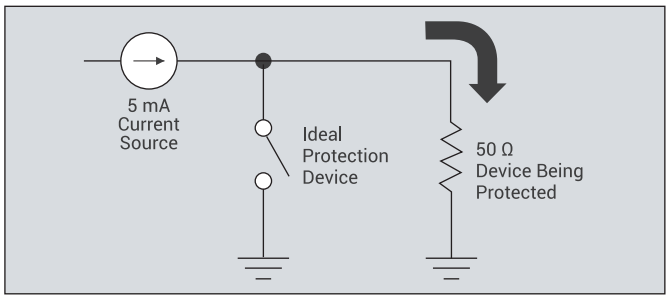

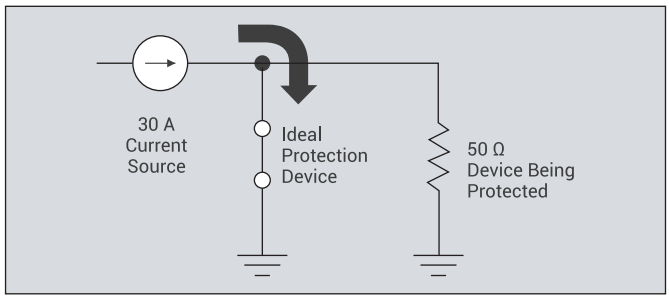

Now let us see the different types of surge suppressors

Types of Surge Suppressors

RC Surge Suppressor
RC surge suppressor is a resistor-capacitor in series combination which is in turn connected in parallel with the coil. The capacitor absorbs the energy associated with voltage spike and the resistor controls the charging of the capacitor. The values of resistor and capacitor are adjusted so as to provide efficient surge suppression.

Advantages
- Can be used with AC as well as DC circuit.
- Low cost
- Simple construction

MNX surge suppressors used with MNX contactor coils are RC surge suppressors

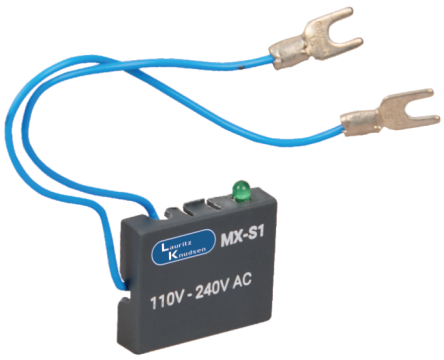

MNX RC Surge Suppressor

Importance of using Surge Suppressor

Metal Oxide Varistor (MOV)

A Metal Oxide Varistor (MOV) as the name suggests it is a voltage dependent resistor. The result is that an MOV has a high resistance at low voltage and a low resistance at high voltage. The varistor is connected in parallel with the coil and only conducts when the voltage across it is beyond the clamping voltage. Thus when a surge occurs the varistor offers a low resistance path and efficiently discharges the surge. However the follow through current resulting due to a voltage strike gradually degrades the varistor and hence MOVs degrade from repeated exposure to surges.

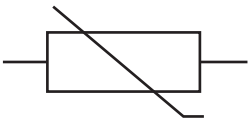

MOV Symbol

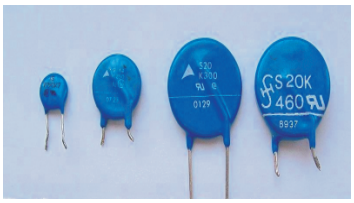

Metal Oxide Varistors

Advantages

- No resonance.
- Usage in AC and DC circuit
- Superior price to performance ratio
- Caacity to conduct large surges

MOV surge suppressors are in-built in Electronic coils of MNX 550/650 and MCX 45/46/47 And Universal AC/DC wide band coils of MO 140 - 300.

Transient voltage suppression diode (TVS)

The operating principle of a TVS diode is similar to that of a MOV. The device operates by providing a parallel path to the excess current when the voltage goes beyond its avalanche potential i.e. when a voltage surge occurs. At all other voltages below its clamping voltage the diode acts as an open circuit. TVS diodes are available in both unidirectional and bidirectional versions.

The response time of a TVS diode is much faster than a MOV and hence it provides an efficient suppression against fast and damaging voltage transients. Also unlike MOV a TVS diode is not degraded by surges within its rating. However TVS has a relatively lower energy absorbing capability as compared to a MOV. Hence TVS diodes are generally preferred for circuits with smaller current spikes.

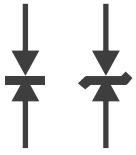

TVS Bidirectional diode symbol

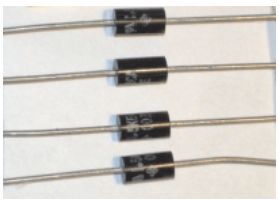

TVS Diodes

Advantages

- Optical Muffling
- Faster response time
- No device degradation after prolonged use
- No change in breakdown potential

MX DC Power contactors, MX0 control contactors, MO DC Power contactors and MO0 control contactors have in built diode surge suppressors.

Following is the comparison between TVS diode and two MOVs of different specifications

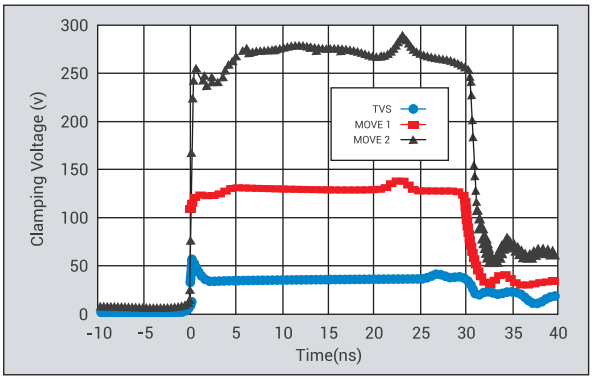

TVS Diodes have a significantly lower clamping voltage than the MOVs

As mentioned above MOV gets degraded due to repeated exposure to surges. This degradation greatly impacts the leakage current, with varistor becoming more resistive after each over voltage while TV Sdiode shows no such degradation.

Device degradation also causes a shift in the breakdown voltage VBR. MOVs show a reduction in VBR after each surge event while no such shift is observed in TVS diode.

Contactor selection for 60 Hz control supply applications

Contactor coils were mostly designed for 50 Hz supply frequency as Indian power system typically operates at 50Hz However we do get requirement for 60 Hz coils are required for the international market. In Therefore, now 60 Hz rating are now marked on most of our coils as shown in the table below.

Range	Rated coil voltage	% Pick up band @50 Hz	% Pick up band @60 Hz
MNX 9 - 32	110 V 50/60 Hz	65-120	85-120
	220 V 50/60 Hz		
	240 V 50/60 Hz		
	415 V 50/60 Hz		
MNX 40 - 650	110 V 50 Hz 132 V 60 Hz	80-110	80-110
	220 V 50 Hz 264 V 60 Hz		
	240 V 50 Hz 288 V 60 Hz		
	415 V 50 Hz 498 V 60 Hz		

Range	Rated coil voltage	% Pick up band @50 Hz	% Pick up band @60 Hz
MCX 01-04	110 V 50/60 Hz	55-120	75-120
	220 V 50/60 Hz		
	240 V 50/60 Hz		
	415 V 50/60 Hz		
MCX 11 - 47	110 V 50 Hz 132 V 60 Hz	80-110	80-110
	220 V 50 Hz 264 V 60 Hz		
	240 V 50 Hz 288 V 60 Hz		
	415 V 50 Hz 498 V 60 Hz		

Contactor selection for 60 Hz control supply applications

Range	Rated coil voltage	% Pick up band @50 Hz	% Pick up band @60 Hz
MO 9 - 45	24 V 50/60 Hz	65-110	85-110
	42 V 50/60 Hz		
	48 V 50/60 Hz		
	110 V 50/60 Hz		
	220 V 50/60 Hz		
	240 V 50/60 Hz		
	320 V 50/60 Hz		
	360 V 50/60 Hz		
	380 V 50/60 Hz		
	415 V 50/60 Hz		
	525 V 50/60 Hz		

Range	Rated coil voltage	% Pick up band @50 Hz	% Pick up band @60 Hz
MO 50 - 300	24 V 50/60 Hz	75-110	85-110
	42 V 50/60 Hz		
	48 V 50/60 Hz		
	110 V 50/60 Hz		
	220 V 50/60 Hz		
	240 V 50/60 Hz		
	320 V 50/60 Hz		
	360 V 50/60 Hz		
	380 V 50/60 Hz		
	415 V 50/60 Hz		
	525 V 50/60 Hz		

Selection of Contactors for AC-4 (Crane Duty) Applications

Application Brief

Crane duty application is an example of AC-4 utilization category where the contactor is subjected to severe inching operations. This is the case when the motors are used in DOL configuration without Variable frequency drives for speed and torque control. As such, Crane duty application is one of the most severe applications greatly straining the contactor.
In the earlier days Slip ring motors dominated crane duty applications. However nowadays we find both squirrel cage as well as slip ring induction motors being used for crane applications. With advent of Variable frequency drives providing efficient Speed and torque control, the application becomes less severe for the contactors. This is because all the switching needs are taken care by the VFD and the contactor can be selected as per AC-1 utilization category. However VFD is a costly proposition and in price driven markets like India, many still prefer to use contactors in conventional configuration for their crane duty applications.

This application notes explains how one should go about selecting the contactors when VFD is not into the picture. In such a scenario the contactor is expected to undergo severe inching operations and hence life of the contactor becomes paramount selection criteria.

Selection of contactors based AC-4 Current Rating and Electrical Life Curves

As emphasized above, the life of the contactor is an important parameter and one must be clear about the life One expects from the contactors when used for crane duty applications. Most of the crane duty manufacturers would expect a certain fixed amount of life and this would then guide their contactor selection.

Power contactors usually have an AC-4 rating mentioned in the product catalogue. However the electrical life given in Life curves is also an important criterion which influences contactor selection.

For example,
Consider MO32 Power Contactor. The rated AC-4 current of MO32 is 32A.

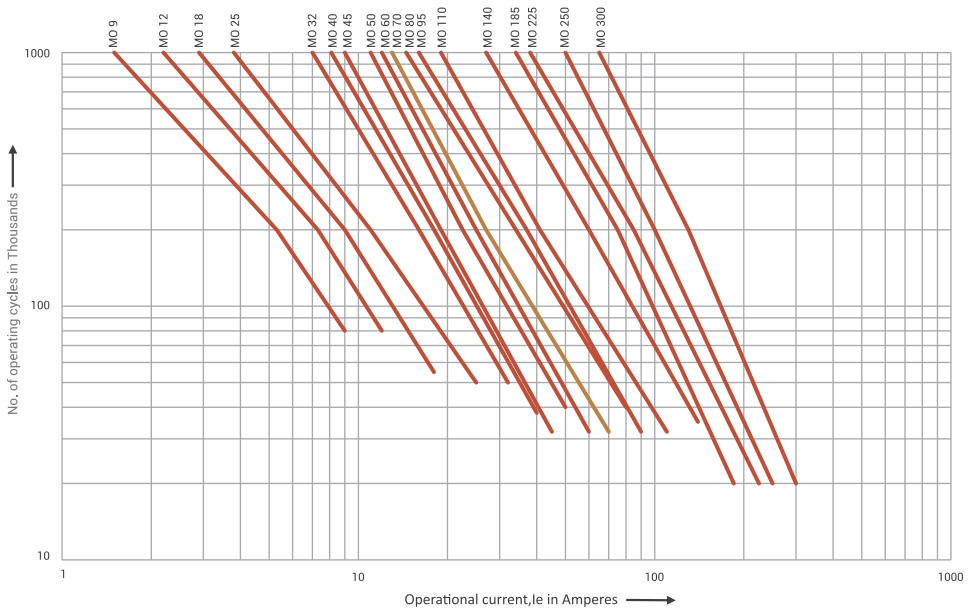

The Electrical life of MO 32 at 32A AC-4 is 50000. When a 32A contactor is used for 32AAC-4 application, one gets an operation life of 50000 operating cycles. If the contactor does approximately 500 switching cycles per week then the contactor will last for a period of 50000/500 = 100 weeks i.e. roughly 2 years.

As emphasized above, the life of the contactor is an important parameter and one must be clear about the life One expects from the contactors when used for crane duty applications. Most of the crane duty manufacturers would expect a certain fixed amount of life and this would then guide their contactor selection.

Selection of Contactors for AC-4 (Crane Duty) Applications

Here the user must be aware of the approximate switching frequency that the contactors will be subjected too in a given day and then based on the life he desires he can back calculate to arrive at contactor rating.For example,User Specifications are given below,

- Switching Operations per day: 300
- Rated Motor current: 30A
- Desired Contactor Life: 3 Years
- Electrical Life = 300 x 365 x 3 = 328500 = 0.3 Million

Referring the electrical life curves, the contactor that gives a life of 0.35 million at 30A AC-4 current is MO **95. Hence for this requirement MO 95 is the correct contactor selection.**

If one directly selects the contactor as per rated current without considering the electrical life then the electrical life at 30 A AC-4 will be approximately 57000. Hence the contactor will last only for (57000/300) 190 days which is much lower than desired life.

Always consider the rated current and desired Electrical life and based on that arrive at the contactor rating through Electrical life curves.

Selection of contactors for 200000 Operating cycles at rated AC-4 current

Most of the times users are not aware of the exact operating cycles the contactor may be subjected too and hence they can refer a standard benchmark of 200000 operating cycles.

Below is the selection table of contactors for 200000 operating cycles

Contactor	Rated current (A) for 200000 operating cycles at AC-4 415V 50Hz
MO 9	5.3
MO 12	7.3
MO 18	9
MO 25	16
MO 32	16
MO 40	18
MO 45	19
MO 50	23
MO 60	25
MO 70	27

Contactor	Rated current (A) for 200000 operating cycles
MO 80	34
MO 95	37
MO 110	41
MO 140	60
MO 185	75
MO 225	85
MO 250	100
MO 300	130

This rating is given as a ready reckoner in catalogue and the user is assured of 200000 AC-4 operating cycles if the selection is as per this rating.

For example, if one wants 200000 operating cycles for the rated current of 9A AC-4 then contactor selected should be MO 18 or above

This method of contactor selection is much simpler and must be employed when one expects a fixed electrical life of 200000 operating cycles which is more than sufficient for crane duty applications. If one desires a higher life than 200000 then one can derate the contactors by selecting one or two ratings higher or lower if lower life is acceptable and then verify the selection through Electrical life curves.

Selection of Contactors for AC-4 (Crane Duty) Applications

Annexure

Selection Chart for Slip Ring Induction Motors for Crane Duty Applications

	Stator duty - 415V 50Hz (10 min cycle duration)			Rotor duty: Delta Connected (10 Min Cycle duration)			Max rotor voltage		
Duty Factor	**20%**	**40%**	**60%**	**20%**	**40%**	**60%**	**Starting**	**Plugging**	**Speed Control**
MO 9	12A	10.5A	9.5A	40A	35A	30A	1100V	415V	550V
MO12	17A	15A	13A	51A	42A	39A	1100V	415V	550V
MO 18	23A	19.5A	17.5A	63A	54A	47A	1100V	415V	550V
MO 25	32A	27A	23A	93A	80A	70A	1100V	415V	550V
MO 32	45A	39A	34A	102A	87A	76A	1100V	415V	550V
MO 40	50A	42A	37A	115A	95A	86A	1100V	415V	550V
MO 45	50A	42A	37A	115A	95A	86A	1100V	415V	550V
MO 50	63A	54A	48A	140A	120A	110A	1100V	415V	550V
MO 60	85A	73A	65A	180A	155A	140A	1100V	415V	550V
MO 70	110A	95A	85A	215A	185A	163A	1100V	415V	550V
MO 80	110A	95A	85A	215A	185A	163A	1100V	415V	550V
MO 95	165A	135A	120A	260A	230A	200A	2200V	415V	690V
MO 110	185A	150A	135A	300A	260A	230A	2200V	415V	690V
MO 140	210A	210A	175A	315A	315A	262A	2000V	415V	600V
MO 185	288A	288A	228A	416A	416A	343A	2000V	415V	600V
MO 225	331A	331A	281A	505A	505A	417A	2000V	415V	600V
MO 250	332A	332A	282A	506A	506A	423A	2000V	415V	600V
MO 300	407A	407A	340A	610A	610A	510A	2000V	415V	600V

Contactor Selection for Motors with long starting time

This note explains contactor selection for motors with long starting time. The note has been divided into three parts for easy understanding of the concepts involved. They are as given follows,

- Understanding Motor Inrush Current
- Long Starting Time Applications
- Contactor selection for motors with long starting time

Understanding Motor Inrush Current (Stator current)

A motor generally drives a load through some transmission system. During start, the motor draws a high starting current or inrush current.

This current is about 6-8 times the motor rated current and can cause a significant voltage drop. This voltage fluctuation affects other devices connected to the same supply. Hence several other strategies are employed for starting motors to reduce its starting current; the most commonly employed being the Star–Delta starting.The starting value of the current is independent of the load attached; however it must be sufficient to overcome the inertia of the motor load system. However, inertia of the load impacts the starting time of the motor as explained in the next part. As the motor accelerates and nears its rated speed, the current gradually reduces and settles down to a value equal to motor rated current or less depending on the actual load connected. The typical torque-speed characteristics of an induction motor are as given alongside.

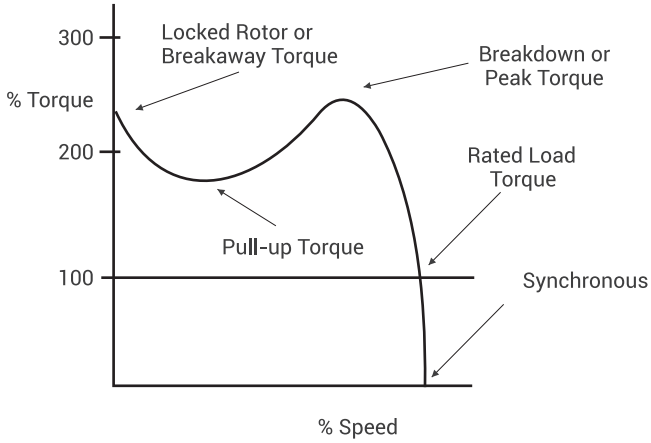

Speed/torque curve for a NEMA design B motor

Long Starting Time Applications

The total time from rest till the motor draws its rated current is called the starting time. The starting time of the motor is a function of the load inertia, load speed and the starting torque developed by the motor. A high inertia load requires an extended time to reach full speed and hence the motor also draws high starting current for a long time. The motor starting time is specified by the manufacturer in the motor data sheet. Since motor starting time is also a function of applied voltage it differs for different starting methods. For example starting time of the motor with Direct-Online starting would be different than with Star-Delta starting.

The starting line current in Star Delta configuration is 1/3rd of the starting current of the same motor in DOL configuration. However applied voltage and therefore starting torque also reduces, leading to higher starting time.

Contactor Selection for Motors with long starting time

The applications are generally those in which the motor starting time is around 40 to 120 secs.

Typical applications involving motors with a high starting time are,

- Induced Draft Fans (ID Fans)
- Forced Draft Fans (FD Fans)

ID and FD fans have a high inertia and hence motors required to drive them will have a long starting time. As a result the motor will draw high inrush current for an extended period of time.

The high inrush current drawn by the motor at start is carried by the contactors that are used for switching. Since, this current flows for an extended period of time, the contactor needs to be selected judiciously. Guidelines for selection of contactor rating is as follows

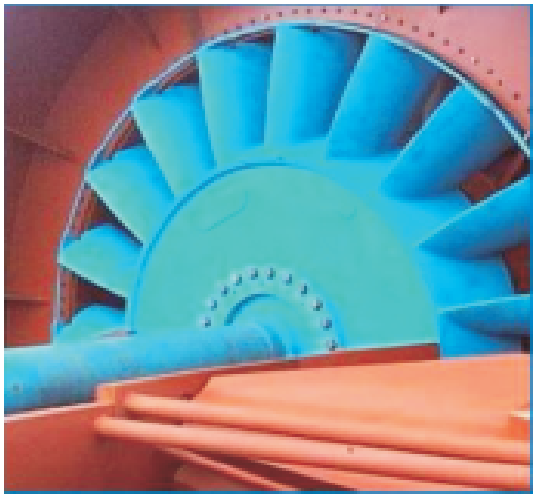



Contactor Selection for motors with long starting time

Contactors are selected based on their overload current withstand capability. Overload withstand capability is defined in IEC 60947-4-1 as given below,

Rated Operational Current Ie(AC3)	Test Current	Duration of Test
≤ 630 A	8 x Ie max/AC-3	10 sec
> 630 A	6 x Ie max/AC-3*	10 sec

It means that a contactor with rated operational current equal to or less than 630A can withstand 8 times its rated AC3 operational current for a period of 10 seconds. This rating is also called as the 10 sec rating of the contactors.

For Example:

- Let Rated operational current (AC3 Utilization category) of contactor = 400A
- Then the maximum current it can carry for a period of 10 sec = 8 x I = 3200A

Now let us look at an example, how to arrive at minimum AC3 Ratings of the Star, Main and Delta contactors

Motor specifications
Motor kW Rating: 160 kW
Motor Full Load Line Current: 304A
Motor Starting time in Star-Delta: 85 sec

Solution:
Delta contactor can be directly selected as per type 2 chart specified by the contactor manufacturer. This is because delta contactor is connected only when the motor has reached near its rated speed and motor current has reduced to its full load value

Contactor Selection for Motors with long starting time

For selection of Star contactor and Main contactor, the withstand current must be taken into consideration

A general schematic of Star-Delta starter is shown below,

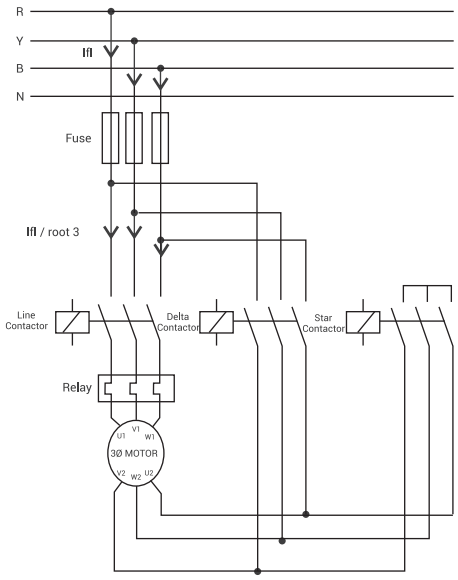

Starting current in a normal delta motor with DOL starting is around 6-8 times the motor full load current. However in Star-Delta starter motor starting current in star is reduced to 1/3rd of this value. Typically starting current when using Star-Delta starting method is around 2.2 times motor full load current.

Starting current (I_s) = 2.2 x motor full load current
= 2.2 x 304 = 669A
Starting time (T_s) = 85 sec
Therefore, (I_s) x^2 $(T)_s$ = 669 x 669 x 85.....(A)

Now, Value (A) must be less than the contactor withstand capacity. i.e.

Based on IEC 60947-4-1,
Contactor Withstand Capacity = (8 I (AC3) x 10..... (B)

It is required that, B > A

$$Ie\ (AC3) > \left(\sqrt{\frac{A}{10}} \div 8\right)$$

Solving the above equation: **Ie(AC3) ≥ 243.8**

The contactor must be selected such that its rated AC-3 current Ie satisfies the above condition.
Therefore in this case MNX 265 can be selected for Star & Main Contactor.

The rating thus arrived at should be compared with the rating of the contactor as given in Type2 Chart, and The higher rating of the two shall be selected

For e.g. In this case, the start and Main contactor rating as given in fused Type 2 chart for 160 kW motor is MNX 140 for Star and Main is MNX 185. Comparing this with the rating arrived at earlier, which is MNX 265, the correct selection will be to use MNX 265

In case of a 160 kW motor with normal starting time (<10 sec) the selection of contactors according to type 2 charts is:

Star Contactor: MNX 140
Main and Delta Contactor: MNX 185

However for the same 160 kW motor with long starting time (85 sec in this case) the contactor selection is:

Star Contactor: MNX 265
Main Contactor: MNX 265
Delta Contactor: MNX 185

Control Transformer sizing for contactor actuation

Introduction

A contactor is an electromagnetic device consisting of a coil and magnet system along with fixed and moving contacts. When the coil is energized, it produces a magnetic field thereby attracting the moving magnet. This causes the fixed and moving contacts to connect and the contactor is said to be actuated. The energization of contactor coil is usually done through a control transformer.

This is mainly done because voltage requirements vary with control systems and with an intermediary control transformer the desired voltage can be obtained.

When a contactor coil is energized, it draws in a high inrush current momentarily. Apart from contactor coils, Relays and solenoids are some other devices which draw inrush current when energized. The control transformer selected must be able to accommodate this momentary high inrush current for a satisfactory operation.

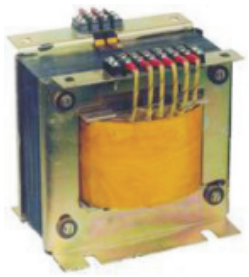





Selection of a control transformer

For a proper selection of control transformer, three parameters of the load circuit must be determined in addition to the minimum voltage required to operate the circuit. These are Hold on VA, Pick-Up VA, and Inrush load power factor.

- Hold-On VA: Hold-On VA is the product of load voltage (V) multiplied by the current that is required to operate the circuit after initial start up or under normal operating conditions. It is calculated by adding the hold-on VA requirements of all the electrical devices of the circuit that will be energized at any given time. Hold-On VA is also sometimes referred as steady state VA.
- Pick-Up VA: Pick-Up VA is the product of load voltage (V) multiplied by the current (A) that is required during start up. It is calculated by adding the pick-up VA requirements of all devices (contactors, timers, relays, solenoids, etc) which will be energized together. Energization of electromagnetic devices takes 20-50 milliseconds. During this inrush period, the electromagnetic devices draw 3 to 10 times the normal current.
- Inrush Load power factor: Inrush load power factor is difficult to determine without a detailed vector analysis of all the load components. Generally such analysis is not feasible; hence a safe assumption would be 40% power factor. Until recently 20% power factor was commonly used for transformer calculations; however tests conducted on major brands of control devices indicate that 40% power factor is a same assumption.

It is recommended that a control transformer be sized at 40% power factor. Some electromagnetic devices typically operate at that level due to their inherently low power factor. Selecting a control transformer at 40% power factor will be more than the adequate size for all the various loads in the circuit.

Besides the above parameters there are two parameters of primary and secondary voltage. Primary voltage is the voltage available from electrical distribution system which is connected to the transformer supply terminals. Secondary voltage is the voltage required for load operation which is connected to the transformer load voltage terminals.

Control Transformer sizing for contactor actuation

Steps for selection of control transformer

- Determine the supply and load voltages as per requirement. The supply voltage is the voltage available to control transformer and load voltage is the operating voltage of all the devices connected to the Transformer output.
- Determine the hold-on and pick-up VA of each coil in the control circuit. This data is provided by the product manufacturer in the datasheet.
- Calculate the hold-on VA by adding the VA requirements of all the equipment that will be energized together(timers, contactors, relays, solenoids, pilot lamps etc).
- Calculate the Pick-Up VA of all the coils that will be energized together. Be sure to include the hold-on VA of components that don't have inrush (lamps, timers) as they present load to the transformer during maximum inrush.
- Calculate the application Inrush VA by using the following industry accepted formula.
- Based on the value of application Inrush VA obtained, use regulation chart for selecting the control transformer rating.

$$\text{Application Inrush VA} = \sqrt{(\text{Pick Up VA})^2 + (\text{Hold On VA})^2}$$

Using regulation chart to select the transformer rating

Continuous VA Transformer Name plate rating (A)	Inrush V A @ 40% Power Factor		
	85% Secondary Voltage	90% Secondary Voltage (B)	95% Secondary Voltage
25	160	130	95
50	270	210	160
75	435	365	255
100	635	520	370
150	1300	1010	700
200	1975	1500	1020
250	2680	2030	1340
350	3665	2820	1895
500	6300	5035	3305
750	10555	7920	5050
1000	15225	11160	6000

The above regulation chart gives the continuous rating of the control transformer and the corresponding Inrush VA at different secondary voltage levels. This secondary voltage value depends on internal losses in The transformer.

After calculating the application inrush VA as discussed above, determine the secondary voltage level of the transformer. Column B indicates that during inrush, 90% of the rated voltage would be available at the transformer secondary, which is an acceptable drop in rated voltage. Once this is determined, read down the column until you arrive at a value which is more than the application inrush VA calculated. Corresponding to this value, the value in column A would be the nameplate rating of the control transformer.

As a final check, make sure that the transformer VA rating is equal to or greater than the total circuit Hold-On Requirements.

Control Transformer sizing for contactor actuation

Let us further understand this with the help of an example,
Pick Up VA = 550 VA
Hold On VA = 36 VA
Application Inrush VA = $\sqrt{(550)^2 + (36)^2}$ =552VA

Now from the above table we consider the secondary voltage delivered by the transformer as 90% of the nameplate secondary voltage under maximum inrush conditions at rated input voltage.

In column B, under 90% secondary voltage, we have to select a value more than 552 VA. The nearest value greater than 552 VA is 1010 VA. Corresponding to the value the control transformer nameplate rating is 150 VA in column A.

Hence rating of the control transformer for energizing MNX 110 is 150 VA

Let us now consider MO 110 contactor,
Pick-up VA = 240 VA
Hold-on VA = 25 VA
Application Inrush VA = $\sqrt{(240)^2 + (25)^2}$ =241.3VA

Now from the above table we consider the secondary voltage delivered by the transformer as 90% of the nameplate secondary voltage under maximum inrush conditions at rated input voltage.

In column B, under 90% secondary voltage, we have to select a value more than 242 VA. The nearest value greater than 242 VA is 365 VA. Corresponding to this value the control transformer nameplate rating is 75 VA in column A.

Hence rating of the control transformer for energizing MO 110 is 75 VA

Summarizing for an 110A AC3 contactor the comparison is as below,

Contactor	MNX 110	MO 110
Pick-Up VA	550	240
Hold-On VA	36	25
Application Inrush	550	241.2
Size of Control Transformer	150 VA	75 VA

It can be seen that with MO contactors, there is a significant reduction in control transformer size.
This will in turn result in cost savings for the user.

The above method assumes that all contactors are picked up at the same time.

There is also an alternative, more accurate way for sizing the control transformer. This method is more application specific and depends on the exact number of components that are actuated at a given point of time.

Let us consider a general example of a system having five Star-Delta motor feeders each of 50 HP motors. A typical Star-Delta feeder would consist of a Star contactor, Main contractor and a delta contactor. It would also have two auxiliary contactors, one for start interlocking and one for emergency stop.

We will now compute the pick-up VA requirements at different instants of time and would select the control transformer corresponding to the highest Pick-up VA requirement at any given time instant.

Case 1: Considering MNX contactors

For a 120 HP Star delta feeder as per Fuse based type 2 charts, selection would be,

- Star Contactor: MNX 80
- Main/Delta Contactor: MNX 95
- Auxiliary contactor: MX0 (One for start interlocking and one for emergency stop)

Since there are 5 feeders total contactors are,
MNX 80: 5 Nos
MNX 95: 10 Nos
MX0: 10 Nos (2 in each feeder)

The Pick-up and Hold-on VA of individual contactors is as given below,

Contactor	Pick-Up VA	Hold-On VA
MNX 80	190	21
MNX 95	550	36
MX0	26	4.5

At t = 0 (At Panel Power On)
The emergency contactors in all five feeders will pick up.
Total Pick-up VA = 26 x 5 VA
= 130 VA

At t = 1 (When Start command is given)
The star contactor, main contactor and start interlocking auxiliary contactor will pick-up
Total Pick-up VA = (190 x 5) + (550 x 5) + (26 x 5)
= 3830 VA

At t = 2 (At Star to Delta Changeover)
The Star contactor will drop off and the delta contactor will pick-up
Total Pick-up VA = 550 x 5
= 2750 VA

At t = 0 except star contactor all contactors will be picked up.
Hence Hold on VA would be maximum at t=2
Total Hold-on VA = (36 x 10) + (4.5 x 10)
= 405 VA

Control Transformer sizing for contactor actuation

Maximum Pick-up VA requirement = 3830 VA
Maximum Hold-on VA requirement = 405 VA

Assuming secondary voltage to be 90% of the rated value,

The control transformer rating to be selected is 500 VA

Had we assumed that all the contactors pick-up at the same time the control transformer selection would have been computed as given alongside.

Pick-Up VA = 190 x 5 + 550 x 10 + 26 x 10
= 6710 VA

Hold-On VA = 21 x 5 + 36 x 10 + 4.5 x 10
= 510 VA

Hence the control transformer rating would be 750 VA, which is much more than the earlier calculated rating. So the earlier method which takes into account the application gives a more accurate control transformer sizing

Case 2: Considering MO contactors

For a 120 HP Star delta feeder as per type 2 charts, selection would be,
Star Contactor: MO 80
Main/Delta Contactor: MO 95
Auxiliary contactor: MX0 (One for start interlocking and one for emergency stop)15

Since there are 5 feeders total contactors are,
MO 80: 5 Nos
MO 95: 10 Nos
Mx0: 10 Nos (2 in each feeder)

The pick up and Hold-on VA of individual contactors is as given below,

Contactor	Pick-Up VA	Hold-On VA
MO 80	240	25
MO 95	240	25
MX0	26	4.5

At t = 0 (At Panel Power On)
The emergency contactors in all five feeders will pick up.
Total Pick-up VA = 26 x 5 VA
= 130 VA

At t = 1 (When Start command is given)
The star contactor, main contactor, and start interlocking auxiliary contactor will pick up Total Pick-up VA
= (240 x 5) + (240 x 5) + (26 x 5)
= 2530 VA

At t = 2 (At Star to Delta Changeover)
The Star contactor will drop off and the main contactor will pick up Total Pick-up VA = 240 x 5
= 1200 VA

At t = 2 except star contactor all contactors will be picked up.
Hence Hold on VA would be maximum at t=2
Total Hold-on VA = (25 x 10) + (4.5 x 10)
= 295 VA

Maximum Pick-up VA requirement = 2530 VA
Maximum Hold-on VA requirement = 295 VA

Assuming secondary voltage to be 90% of the rated value,

The control transformer rating to be selected is 350 VA

Had we assumed that all the contactors pick up at the same time the control transformer selection would have been computed as below,

Pick-Up VA = 240 x 5 + 26 x 10
= 3860 VA

Hold-On VA = 25 x 15 + 4.5 x 10
= 420 VA

Hence the control transformer rating would be 500 VA, which is much more than the earlier calculated rating. So the earlier method which takes into account the application gives a more accurate control transformer sizing

Control Transformer sizing for contactor actuation

From the above computation it is clear that control transformer size with MO contactors is much lower than that obtained by using MNX contactors. This greatly reduces the cost of the control transformer providing direct benefit to the user. Thus MO turns out to be an economical solution over MNX with regards to control transformer sizing for the end user.

Annexure

Below is the table for control transformer ratings for MNX & MO range of contactors (single contactor) at 90% secondary voltage.

MNX Power Contactors

MNX Frame Wise	Pick-up VA (Single Coil)	Hold-on VA (Single Coil)	Application Inrush VA (Single Coil)	Transformer VA rating (For single Coil)
MNX 9-22	68	11	69	25
MNX 25-40	68	11	69	25
MNX 50-80	190	21	191	50
MNX 95-140	550	36	551	150
MNX 185-225	960	56	962	150
MNX 300-400	2100	95	2102	350
MNX 550-650	1000	25	1000	150

MO Power Contactors

MO Frame Wise	Pick-up VA (Single Coil)	Hold-on VA (Single Coil)	Application Inrush VA (Single Coil)	Transformer VA rating (For single Coil)
MO 9-45	77	9	77.5	25
MO 50-70	144	15	144.8	50
MO 80-110	240	25	241.3	75
MO 140-225	1000	50	1001.25	150
MO 250-300	1400	65	1401.5	200

Application Guide for Reduced Voltage Autotransformer Starter

Background

With the introduction of M-Line range of controlgear products and F-Line range of SDFs a need for a comprehensive selection chart for autotransformer motor feeder was felt necessary. Also, we have been receiving queries from various branches for an application guide on the same.

Brief Description

An autotransformer starter reduces inrush current by using a transformer in the line just ahead of the Motor to step down the voltage applied to the motor terminals. By reducing the voltage, the current drawn from the line is reduced during start-up.

Starting with reduced voltage decreases the full load current at the motor terminals in proportion to the voltage reduction while the full load torque is reduced by the square of the voltage reduction.

Recommended Wiring Diagram

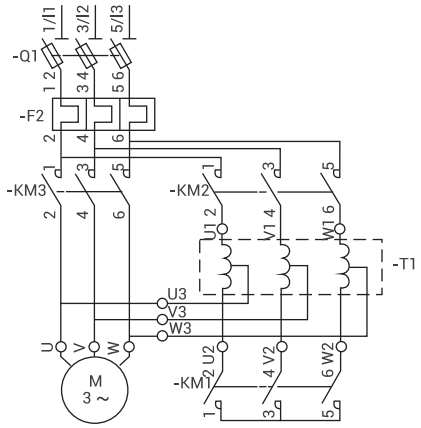

Operation

In autotransformer starters, the motor is started at reduced voltage, which is supplied from an autotransformer. The starting sequence has three stages.

During the first stage, the autotransformer is star connected, and the line contactor is closed. This starts the motor with a reduced voltage, the value of which depends upon the ratio selected for the transformer. Autotransformers are normally provided with taps to allow the best ratio to be chosen during commissioning.

In the second stage, the star connection is opened, and the autotransformer acts as an inductor connected in series with the motor. This transition is normally timed to occur when the motor speed has stabilized at the end of the run-up period.

The third stage then follows almost immediately, and involves shunting the transformer completely, so that the motor is directly connected to the supply.

As shown in the wiring diagram

- Star connection of the autotransformer is made by KM1, then contactor KM2 closes and the motor starts under reduced voltage.
- The neutral point is opened by KM1; part of the autotransformer winding is switched into each phase for a short moment, constituting a stator starting inductance.
- KM3 switches the motor to full mains voltage and causes the autotransformer to be shunted out of circuit by KM2.

Application Guide for Reduced Voltage Autotransformer Starter

Contactor Switching Sequence

Contactor	Start	Transition (initial)	Transition (final)	ON
KM1 (Star)	Close	Open	Open	Open
KM2 (Step)	Close	Close	Close	Open
KM3 (Main)	Open	Open	Open	Close

When the motor is directly switched to lines, the motor current is generally 6 times the full load current.

Istart = 6In = V/Z $(3)^{1/3}$
Istart = Starting motor current
In = Full load current
V = Line voltage

In case of autotransformer if a tapping of transformation ratio K is used, then V_{ph} across motor is KV/$(3)^{1/3}$

Motor Current during start; I = kV/Z $(3)^{1/3}$
= kistart
= k*6I_n

The current taken by the autotransformer is Ki2.
= K^2 *6In
= K^2 Istart

Hence, though the motor current is reduced by only K times the direct switching current, the current taken by the line is reduced by K^2 times.

Similarly for starting torque,
› $T^1$8 $(V/3^{13})^2$
T1 = torque during direct starting.

With an autotransformer,

› $T^1$8 $(V/3^{13})^2$
T1 = torque during direct starting.

Hance, T2/T1=K^1

Starting torque with autotransformer =
K^2 * Starting torque with direct on-line starting.

Thus it provides maximum starting torque with minimal line current. Due to transformer action, the line current will be 25 %, 42 % or 64 % of full voltage values for the 50 %, 65 % or 80 % taps respectively.

Application Guide for Reduced Voltage Autotransformer Starter

› Operating Curves

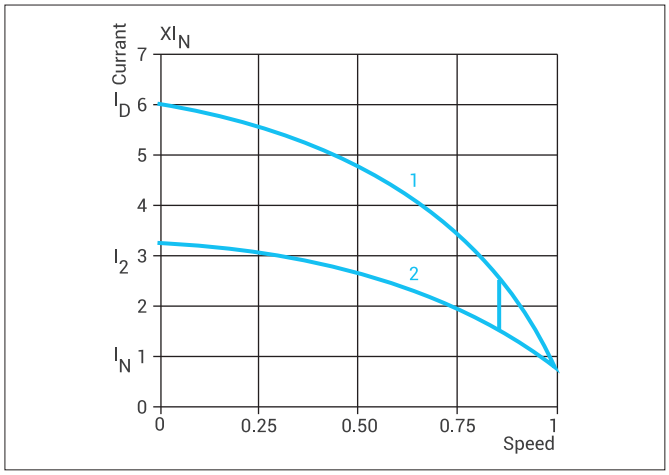

1. Direct Switching Current
2. Current with Autotransformer

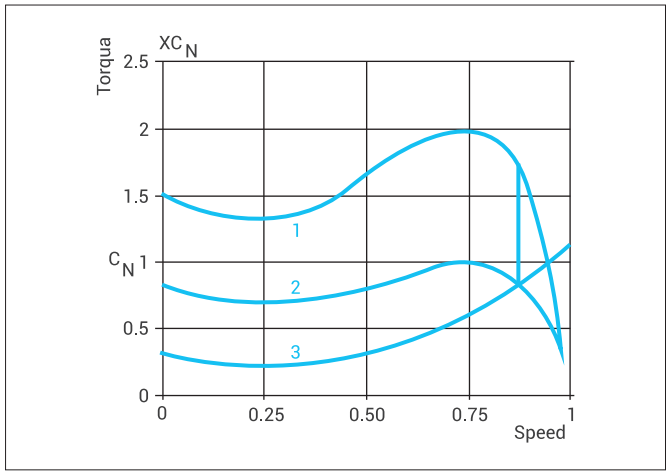

1. Direct Motor Torque
2. Torque with Autotransformer
3. Load Torque

The autotransformer motor starter selection chart is based on the closed transition which never disconnects the motor from the power source, and transient phenomena are eliminated. This is Also known as **'Korndorfer'** method.

The transition from reduced voltage to full voltage on motor starters can be based on current or time. The over current relay monitors the motor current. When the motor current drops below the preset value, the relay signals the motor starter to switch to full voltage. Or when the setting time on the timer has expired, the autotransformer is bypassed.

Typically autotransformer has three taps, which provide 50%, 65% and 80% of full line voltage. The autotransformer starter can be used for any squirrel-cage motor. Typically autotransformer has three taps, which provide 50%, 65% and 80% of full line voltage. The autotransformer starter can be used for any squirrel-cage motor.

Conclusion:
This chart provides aready reckoner for selection of components for an autotransformer motor feeder.

Application Guide for Reduced Voltage Autotransformer Starter

Mtor Ratg: 3Ø, 415, 50 Hz				Contactor				Relay				
HP	kW	In (A)	Main (KM3)	Step (KM2)			Star (KM1)	Type	Range (A)	Fuse	Rating (A)	SDF
				50%	65%	80%						
7.5	5.5	11.2	MO 12	MO 9	MO 9	MO 9	MO 9	RTO - 1	8.5-12.5	HF	32	FN 32
10	7.5	14.8	MO 18	MO 9	MO 9	MO 12	MO 9	RTO - 1	12.5-18.5	HF	32	FN 32
12.5	9.3	19	MO 25	MO 9	MO 9	MO 18	MO 9	RTO - 1	17-25.5	HF	50	FN 63
15	11	22	MO 25	MO 9	MO 12	MO 18	MO 12	RTO - 1	17-25.5	HF	63	FN 63
17.5	13	24	MO 32	MO 9	MO 12	MO 18	MO 12	RTO - 1	17-25.5	HF	63	FN 63
20	15	29	MO 32	MO 9	MO 18	MO 25	MO 18	RTO - 1	25-37	HF	63	FN 63
25	18.6	35	MO 40	MO 9	MO 18	MO 25	MO 18	RTO - 1	25-37	HN, 000	80	FN 100
30	22.5	40	MO 45	MO 12	MO 18	MO 32	MO 18	RTO - 1	35-45	HN, 000	80	FN 100
35	26	47	MO 50	MO 12	MO 25	MO 32	MO 25	RTO - 2	40-57	HN, 000	100	FN 100
40	30	55	MO 70	MO 18	MO 25	MO 40	MO 25	RTO - 2	40-57	HN, 000	100	FN 100
45	33.5	60	MO 70	MO 18	MO 32	MO 40	MO 32	RTO - 2	50-75	HN, 000	100	FN 100
50	37	66	MO 80	MO 18	MO 32	MO 45	MO 32	RTO - 2	50-75	HN, 00	125	FN 125
60	45	80	MO 95	MO 25	MO 40	MO 70	MO 40	RTO - 3	75-110	HN, 00	125	FN 125
75	55	100	MO 110	MO 32	MO 45	MO 70	MO 45	RTO - 3	75-110	HN, 00	160	FN 160
90	67.5	120	MO 140	MO 32	MO 70	MO 80	MO 70	RTO - 4	105-156	HN, 0	200	FN 200
100	75	135	MO 140	MO 40	MO 70	MO 95	MO 70	RTO - 4	105-156	HN, 0	200	FN 200
110	80	139	MO 185	MO 40	MO 70	MO 95	MO 70	RTO - 4	138-201	HN, 0	200	FN 200
125	90	165	MO 185	MO 45	MO 95	MO 110	MO 95	RTO - 4	138-201	HN, 1	250	FN 250
150	110	200	MO 225	MO 70	MO 95	MO 140	MO 95	RTO - 4	138-201	HN, 1	250	FN 250
175	130	230	MO 250	MO 70	MO 110	MO 185	MO 110	RTO - 4	201-291	HN, 1	315	FN 315
197	147	260	MO 300	MO 70	MO 140	MO 185	MO 140	RTO - 4	201-291	HN, 2	400	FN 400
200	150	275	MO 300	MO 70	MO 140	MO 185	MO 140	RTO - 4	201-291	HN, 2	400	FN 400
215	160	280	MO 300	MO 80	MO 140	MO 185	MO 140	RTO - 4	201-291	HN, 2	400	FN 400
225	168	300	MO 300	MO 80	MO 140	MO 225	MO 140	RTO - 4	255-375	HN, 2	400	FN 400
245	180	320	MNX 400	MO 95	MO 140	MO 225	MO 140	RTO - 4	255-375	HN, 2	400	FN 400
270	200	340	MNX 400	MO 95	MO 185	MO 225	MO 185	RTO - 4	255-375	HN, 3	500	FN 630
300	225	385	MNX 550	MO 110	MO 185	MO 250	MO 185	MN 12	340-570	HN, 3	500	FN 630
335	250	425	MNX 550	MO 110	MO 185	MO 300	MO 185	MN 12	340-570	HN, 3	500	FN 630
400	300	500	MNX 550	MO 140	MO 225	MO 300	MO 225	MN 12	340-570	HN, 3	630	FN 630
430	315	535	MNX 550	MO 140	MO 300	MNX 400	MO 250	MN 12	340-570	HN, 3	630	FN 630

Length of control cables

Introduction

There is an inherent capacitance in cables. The cable capacitance indicates how much charge the cable can store within itself. If a voltage is being applied the insulation on the individual wires becomes charged by the voltage. This cable capacitance is defined in µF/km. With higher lengths of cable the ability to store charge also increases.

With advent of technology and focus on energy saving, contactors are also becoming energy efficient and compact. However there is one issue linked with low VA consumption of AC coil of contactors. When the control cable length is high, the cable capacitance is more and it may be sufficient to store energy for providing hold on VA to contactor coil. This may lead to delayed drop off of the contactor. This applies to contactors operating with AC control supply only.

The effect of cable capacitance depends on the design of the control circuit as shown below,

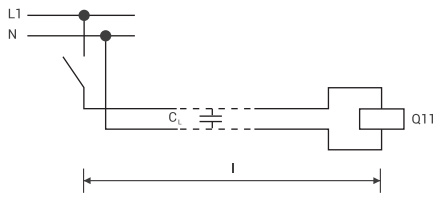

In this case, when the coil is de-energized the net cable capacitance is disconnected from the supply and discharges through the coil. Hence there may be a slight delay in contactor drop off due to CL

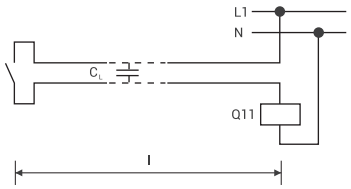

In this case, the net cable capacitance continues to remain connected to the supply even after the coil supply is switched off. This capacitance will feed the coil and if the energy stored in the capacitance is more than coil Hold-on VA, the coil will continue to remain energized and the contactor will fail to drop.

The problem of cable capacitances is mainly encountered in large scale installations such a crane systems in container terminals or where control is from field devices or automation system situated away from the control panels.

Maximum permissible control cable length for reliable contactor drop off can be defined as below:

$$L < 3.18 \left(\frac{m}{m+1}\right)\left(\frac{PH * 10^6}{C_C * U_C^{\ 2}}\right) \text{ meter}$$

Where,
L - Length of control cable in meter
m - ratio of minimum drop-off voltage to rated coil voltage
PH - Rated Hold-On power of the contactor in VA
CC - Cable capacitance per unit length in µF/km
UC - Rated control supply voltage in V

Length of control cables

The following table gives a ready reckoner of maximum control cable length for MX contactor (AC) to ensure a clear drop off when control supply is cut off:

Family	Contactors	Hold-On Power PH (VA)	Min Drop-off Voltage/Rated voltage	L (m) <		
			U_d / U_c	110 V	240 V	415 V
MX mini	MX 0/6/9/12 AC	4.5	0.3	1365.74	286.63	95.95
MNX	MNX 9 - 40	11	0.35	3751.0	788.0	263.5
	MNX 50 - 80	21	0.35	7161.0	1504.3	503.1
	MNX 95 - 140	36	0.35	12276.0	2578.8	862.5
	MNX 185 - 225	56	0.35	19096.1	4011.5	1341.6
	MNX 300 - 400	95	0.35	32395.1	6805.2	2276.0
	MNX 550 - 650	25	0.35	8525.0	1790.8	598.9
MO	MO 9 - 45	9	0.35	3069.0	644.7	215.6
	MO 50 - 70	15	0.35	5115.0	1074.5	359.4
	MO 80 - 110	25	0.35	8525.0	1790.8	598.9
	MO 140 - 225	50	0.35	17050.0	3581.7	1197.9
	MO 140 - 225 *	17	0.25	4472.0	939.4	314.2
	MO 250 - 300	65	0.35	22165.0	4656.2	1557.2
	MO 250 - 300 *	17	0.25	4472.0	939.4	314.2
MO0	MO0 AC	9	0.4	1365.74	710.42	237.6

* Electronic coil version

The following graphs give the trend of permissible control cable lengths with Hold-On VA at different voltage ranges. It must be noted that the trends are given at most common values of cable capacitances Cc.
Cc= 0.2 and Cc = 0.3 µf/km

Applicable for MNX / MO Contactors

Cc = 0.2 µf / km

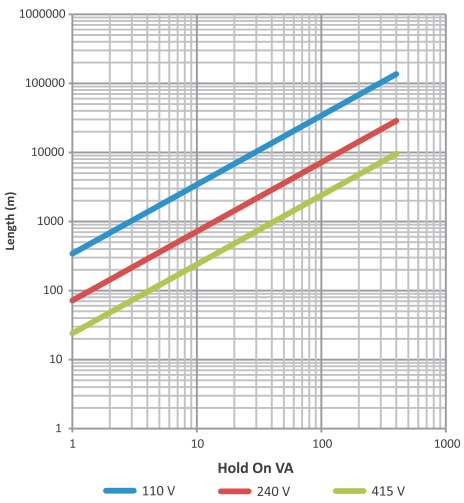

For Cc = 0.3 µf / km

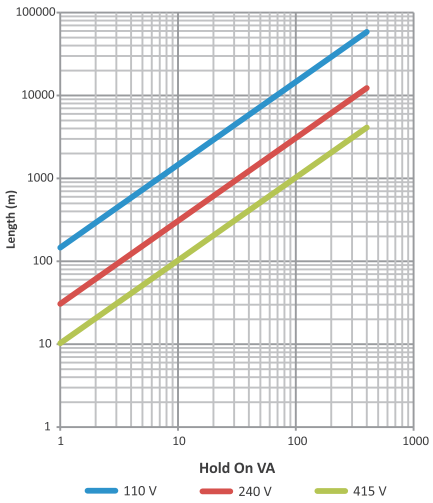

Length of control cables

Applicable for MX Mini & MX0 Control Contactors

For Cc = 0.2 µf / km

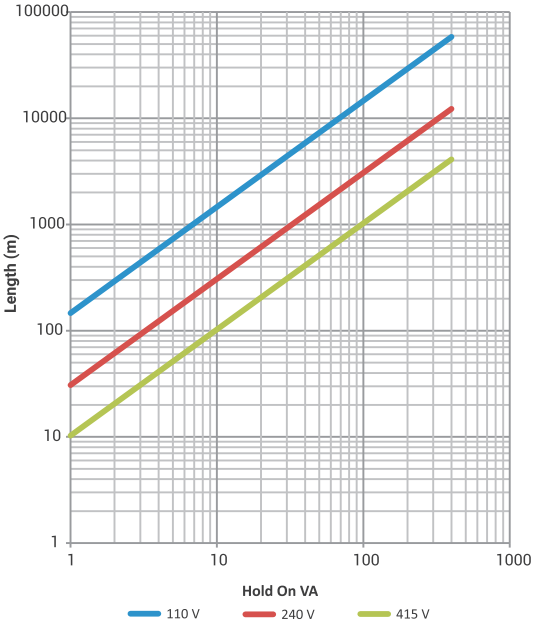

For Cc = 0.3 µf / km

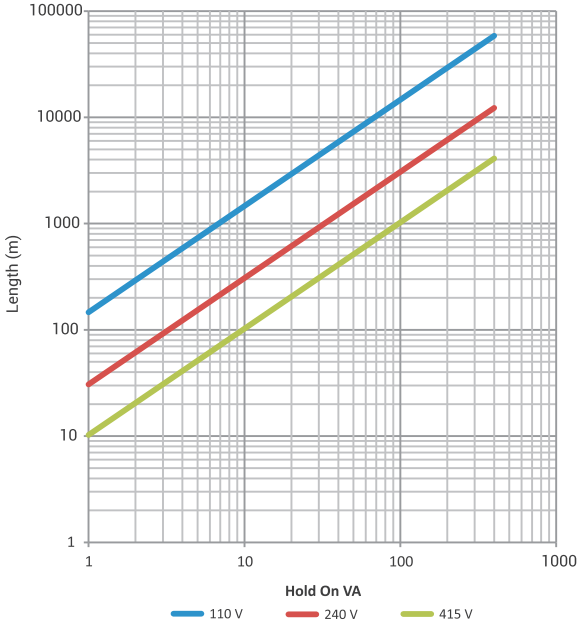

Detailed Selection guide for lightening circuit

Today, street lighting commonly uses high intensity discharge lamps. The lamps generally used for street lighting and outdoor lighting are given below.

› Metal Halide lamps
› Sodium vapour lamps

Out of these, high pressure sodium vapour lamps are the most ubiquitous for street lighting because they are the most efficient light source. HPSV lamps are preferred because even though it has low colour rendering, it is not a major requirement in street lighting applications. The comparison is shown in the annex.

Brief description of HPSV lamp

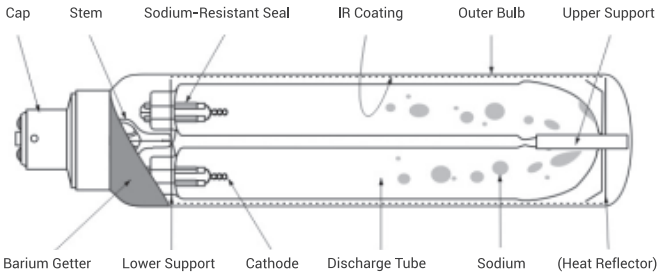

Operation: -

› These lamps use an alloy of sodium and mercury (called sodium amalgam) in a discharge through xenon gas at high pressure inside the arc tube.
› There is an ignitor built into the ballast which sends a pulse of high voltage energy (3000V to 4500V) through the arc tube. This pulse starts an arc through the xenon gas.
› This ignitor operates within a second or two after switch on, and through the ballast induces aseries of very high voltage pulses to ignite the lamp. Once the lamp has started, the internal ignitor stops operating.
› Xenon gas is ionized and this facilitates striking of arc when voltage is applied across electrodes. The heat generated by the arc then vaporizes the mercury and sodium. The mercury vapor raises the gas pressure and the sodium vapour produces light when the pressure within the arc tube is sufficient.

Current profile

Inrush current during switch ON due to charging of circuit capacitors - With the capacitor introduced in the supply circuit for power factor compensation, it draws a charging current during switching ON. The value of inrush current during switch ON of lamps is generally between 20-60In for a period less than 5 ms.

Preheating current: - Before ignition in order to ionize the gas between the electrodes, the discharge lamp draws more current from the supply. This current (also known as starting current) generally ranges from 1.1 to 1.6 times the nominal current In for a period of 2-10 min.

For Lighting Circuit Switching

According to IEC 60947-4-1: AC-5a, 5b Utilization category
The operating conditions of lighting circuits have the following characteristics:

› Continuous duty: the switching device can remain closed for several days or even months
› A dispersion factor of 1: all luminaries in the same group are switched ON or OFF simultaneously
› A relatively high temperature around the device due to the enclosure, the presence of fuses, or an unventilated control panel location

Detailed Selection guide for lightening circuit

Contactor Selection
Based on :

- A 220/240V single-phase circuit
- An ambient temperature of 55C0, taking into account the operating conditions
- An electrical life of more than 10 years

Considerations:

- The total current
- Transient phenomena which occur at switch-on
- The starting current and their duration
- The circulation of any harmonics which may be present

A) Selection chart for HPSV lamps 240V, 50 Hz with power factor compensation Utilization category AC-5a

HPSV Chart with Compensation

Lamp characteristics	Rating (W)		50	70	100	150	250	400	700	1000
	Total power (Including ballast power)		62.5	87.5	125	187.5	312.5	500	875	1250
Starting (preheating) current (A)			0.40	0.55	0.79	1.19	1.98	3.17	5.55	7.93
Running current (A)			0.28	0.40	0.57	0.85	1.42	2.26	3.96	5.66
Capacitance value required for compensation (µF)			6.8	10	15	22	33	68	100	150
Max no. of lamps per phase	MO 9 (qty)	9	32	23	16	11	6	4	2	2
	MO 12 (qty)	12	42	30	21	14	8	5	3	2
	MO 18 (qty)	18	63	45	32	21	13	8	5	3
	MO 25 (qty)	25	88	63	44	29	18	11	6	4
	MO 32 (qty)	32	113	81	56	38	23	14	8	6
	MO 40(qty)	40	141	101	71	47	28	18	10	7
	MO 45 (qty)	45	159	113	79	53	32	20	11	8
	MO 50 (qty)	50	176	126	88	59	35	22	13	9
	MO 60 (qty)	60	212	151	106	71	42	26	15	11
	MO 70 (qty)	70	247	176	123	82	49	31	18	12
	MO 80 (qty)	80	282	202	141	94	56	35	20	14
	MO 95 (qty)	95	335	239	168	112	67	42	24	17
	MO 110 (qty)	110	388	277	194	129	78	48	28	19
	MO 140 (qty)	140	494	353	247	165	99	62	35	25
	MO 185 (qty)	185	652	466	326	217	130	82	47	33
	MO 225 (qty)	225	794	567	397	265	159	99	57	40
	MO 250 (qty)	250	882	630	441	294	176	110	63	44
	MO 300 (qty)	300	1058	756	529	353	212	132	76	53

Detailed Selection guide for lightening circuit

B) Selection chart for HPSV lamps 240V, 50 Hz without power factor compensation Utilization category AC-5a

HPSV Chart without Compensation

Lamp characteristics	**Rating (W)**		50	70	100	150	250	400	700	1000
	Total power (Including ballast power)		62.5	87.5	125	187.5	312.5	500	875	1250
Starting (Preheating) current (A)			0.91	1.28	1.82	2.73	4.56	7.29	12.76	18.23
Running current (A)		AC3	0.65	0.91	1.30	1.95	3.26	5.21	9.11	13.02
Max no. of lamps per phase	**MO 9 (qty)**	9	14	10	7	5	3	2	1	1
	MO 12 (qty)	12	18	13	9	6	4	2	1	1
	MO 18 (qty)	18	28	20	14	9	6	3	2	1
	MO 25 (qty)	25	38	27	19	13	8	5	3	2
	MO 32 (qty)	32	49	35	25	16	10	6	4	2
	MO 40(qty)	40	61	44	31	20	12	8	4	3
	MO 45 (qty)	45	69	49	35	23	14	9	5	3
	MO 50 (qty)	50	77	55	38	26	15	10	5	4
	MO 60 (qty)	60	92	66	46	31	18	12	7	5
	MO 70 (qty)	70	107	77	54	36	21	13	8	5
	MO 80 (qty)	80	123	88	61	41	25	15	9	6
	MO 95 (qty)	95	146	104	73	49	29	18	10	7
	MO 110 (qty)	110	169	120	84	56	34	21	12	8
	MO 140 (qty)	140	215	153	107	72	43	27	15	11
	MO 185 (qty)	185	284	203	142	95	57	35	20	14
	MO 225 (qty)	225	345	246	173	115	69	43	25	17
	MO 250 (qty)	250	383	274	192	128	77	48	27	19
	MO 300 (qty)	300	460	329	230	153	92	58	33	23

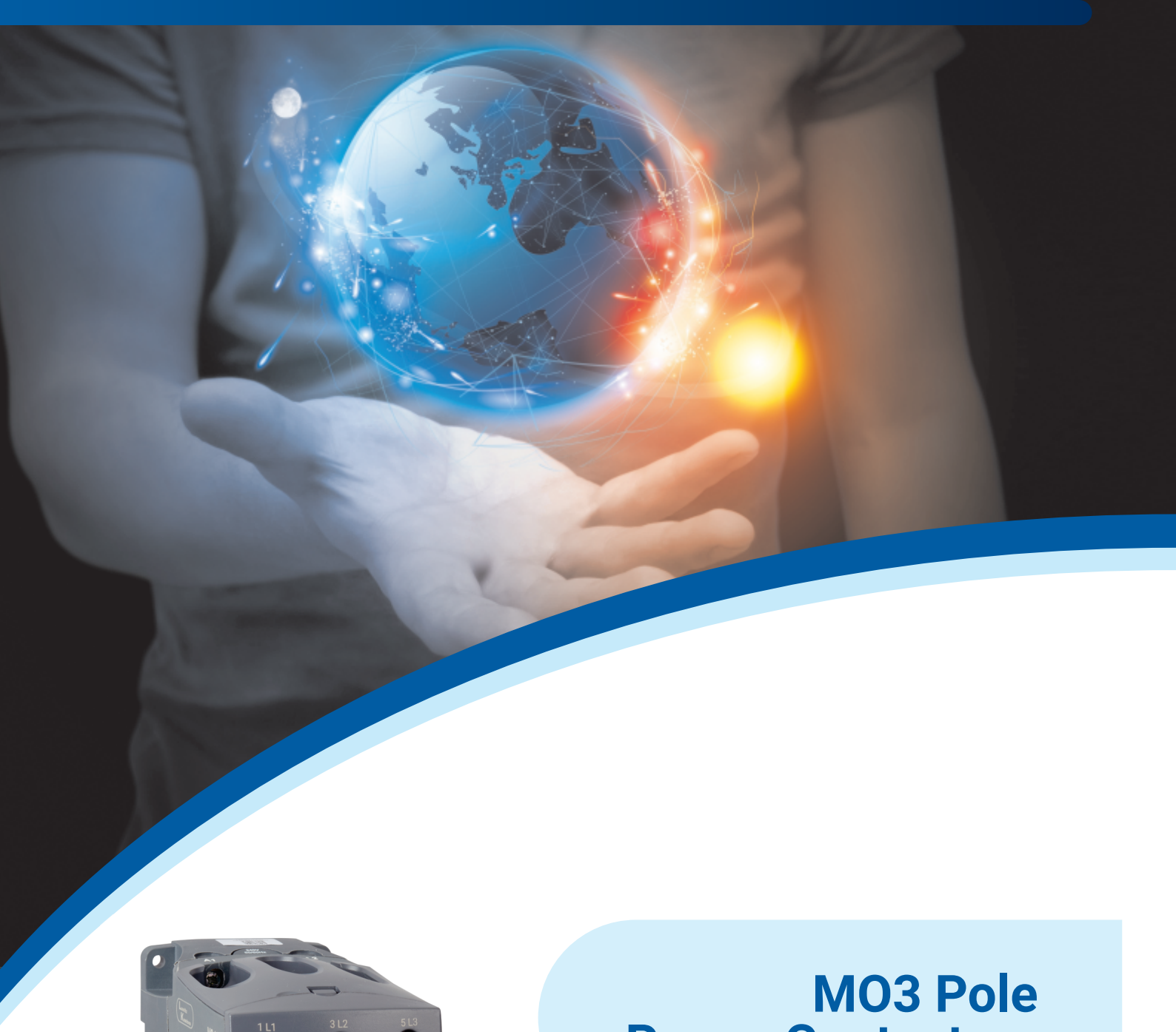



MO3 Pole Power Contactors

MO Contactors, with their unique styling and visual appeal provide a unique blend of aesthetics with reliable performance. The contactors, available from 9A to 300A AC-3 are suited for general purpose as well as special purpose machines. Their compact design ensures saving in panel space and being RoHS compliant they provide all the benefits of a clean and green contactor.

OPEN DOORS TO NEW DIMENSIONS IN SPACE ECONOMY

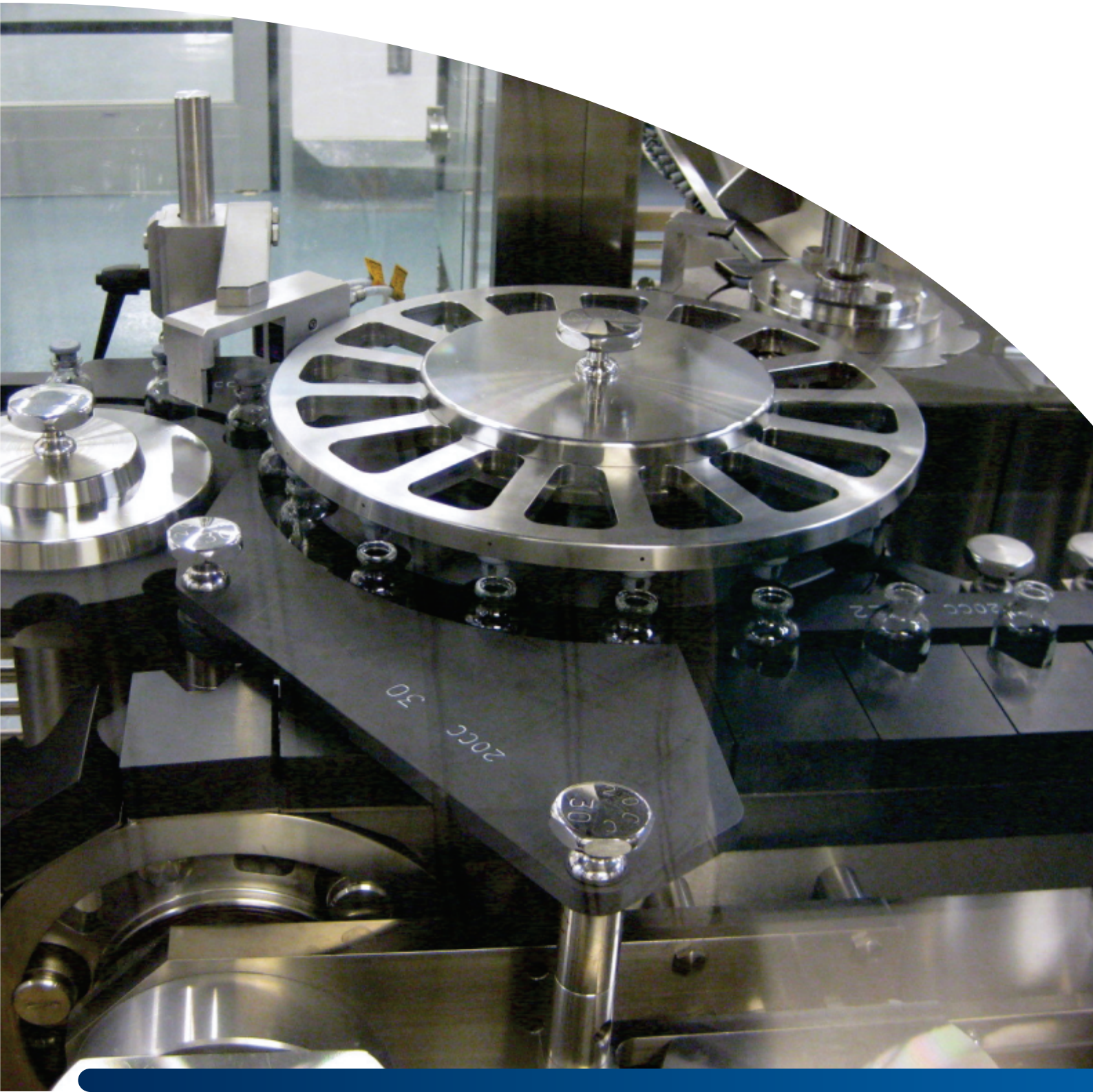

Overview



Cassette type bridge for easy contact replacement



Safety shrouds for power terminals to ensure safe maintenance environment



Box clamp terminations for faster termination



Modular load feeder



1NO+1 NC Aux. contact inbuilt in 45 mm width for 9A / 12A / 18A

Key Features

MO Contactors

- Completely shrouded and safe
- Compact thus saving panel space
- Unique styling and visual appeal
- Standardized accessories for entire range reducing inventory costs
- Lug less termination for fast termination and significant reduction in wiring costs
- Low VA consumption thus reducing control transformer size
- Wide range of accessories to meet all applications









RoHS

In keeping with the mission to deliver the best, Lauritz Knudsen understands the requirements of the RoHS directive. The directive restricts the use of hazardous substances in electrical and electronic equipment and bans electrical equipment containing more than permitted levels of lead, cadmium, mercury, hexavalent chromium, polybrominated biphenyl (PBS) and polybrominated diphenyl ether (PBDE) flame retardants.

Technical Details

- Range from 9A-300A AC-3e
- Range 140A-300A available with conventional/universal AC/DC electronic coil version
- Low pick-up VA consumption
- Standardized accessories for 9A-110A & 140A-300A range
- DIN Rail mounting facility upto 110A
- Compact dimensions saving precious panel space
- Lug as well as Lugless termination
- RoHS compliant





		Units	MO 9	MO 12	MO 18
Catalogue no.			CS 94833	CS 94834	CS 94835
Conformance to standards					
Power Contacts					
No. of poles			3	3	3
Rated insulation voltage, U_i		V	1000	1000	1000
Rated impulse withstand voltage, U_{imp}		kV	8	8	8
Rated kW	240 V AC	kW	2.2	3.0	4.0
	415 - 500 V AC	kW	4.5	5.5	9.3
	690 V AC	kW	5.5	7.5	11.0
Rated making capacity	240 V AC	A	300	400	400
	415 - 500 V AC	A	300	400	400
	690 V AC	A	84	108	144
Rated breaking capacity	240 V AC	A	250	300	300
	415 - 500 V AC	A	250	300	300
	690 V AC	A	70	90	120
Rated operational current, I_e at60°C Motor duty : 3Ø, 415 V, 50 Hz	Utilization category AC-1	A	30	32	32
	Utilization category AC-2	A	9	12	18
	Utilization category AC-3e	A	9	12	18
	Utilization category AC-4	A	9	12	18
	Utilization category AC-4 (2,00,000 operations)	A	5.3	7.3	9
Rated Operational current, Ie at 60°C Motor duty : 3Ø, 690 V, 50 Hz	Utilization category AC-3e	A	7	9	12
AC-8b rating at 415V, 50 Hz		A	11.5	15.5	23.5
Permissible short time ratings	1 Seconds	A	250	300	300
	10 Seconds	A	105	145	145
	30 Seconds	A	70	70	84
	1 Minute	A	60	80	80
	10 Minute	A	30	40	40
	15 Minute	A	25	30	30
Mechanical life, No. of operating cycles		millions	10	10	10
Max. frequency of operations: Operating cycles/hr	Mechanical	cy/hr	7200	7200	7200
	Utilization category AC-1	cy/hr	3000	3000	3000
	Utilization category AC-2	cy/hr	750	750	750
	Utilization category AC-3e	cy/hr	750	750	750
	Utilization category AC-4	cy/hr	300	300	300
Vibration resistance conforming to IEC 60068-2-6					
Ambient temperature around the device	Service temperature	°C			
	Storage temperature	°C			
Altitude without deration		m			
Degree of Pollution					
Degree of protection					
Protective treatment as per IEC 60068 - 2 - 30					
Fuse protection against short circuit			HF 25	HF 32	HF 32
Watt loss per pole	Utilization category AC-1	W	1.6	2.5	2.5
	Utilization category AC-3e	W	0.25	0.5	0.9

Technical Details








MO 25	MO 32	MO 40	MO 45	MO 50	MO 60
CS 94567	CS 94568	CS 94569	CS 94570	CS 94572	CS 94573
IS/IEC 60947-4-1, IEC 60947-4-1, EN 60947-4-1					
3	3	3	3	3	3
1000	1000	1000	1000	1000	1000
8	8	8	8	8	8
5.5	7.5	11.0	15.0	15.0	18.6
11	17.3	22.5	25	30	33.5
12.5	18.5	22.0	22.0	30.0	30.0
550	550	550	550	1000	1000
550	550	550	550	1000	1000
180	252	300	300	420	420
550	550	550	550	900	900
550	550	550	550	900	900
150	210	250	250	350	350
45	50	50	50	100	100
25	32	40	45	50	60
25	32	40	45	50	60
25	32	40	45	50	60
16	16	18	19	23	25
15	22	25	25	35	35
32.5	41.5	52	58.5	65	78
400	600	600	600	1000	1000
240	400	400	400	650	650
120	225	225	225	370	370
110	150	150	150	250	250
50	70	70	70	120	120
45	65	65	65	110	110
10	10	10	10	10	10
7200	7200	7200	7200	3600	3600
3000	3000	3000	3000	3000	3000
750	750	750	750	750	750
750	750	750	750	750	750
300	300	300	150	300	300
	5..... 300 Hz : 3g				
	-20°C to + 60°C				
	-40°C to +80°C				
	3000				
	3				
	IP 20				
	TH				
HF 63	HF 63	HN,000 80	HN,000 80	HN,00 100	HN,00 125
4	3.5	3.5	3.5	5.7	9.5
1.25	1.5	2.3	2.9	5	5.3

Technical Details

- Range from 9A-300A AC-3e
- Range 140A-300A available with conventional/universal AC/DC electronic coil version
- Low pick-up VA consumption
- Standardized accessories for 9A-110A & 140A-300A range
- DIN Rail mounting facility upto 110A
- Compact dimensions saving precious panel space
- Lug as well as Lugless termination
- RoHS compliant





		Units	MO 9	MO 12	MO 18
Catalogue no.			CS 94833	CS 94834	CS 94835
Auxiliary Contacts					
No. of additional aux. contact possible			4	4	4
No. of built-in auxiliary contacts			1 NO + 1 NC	1 NO + 1 NC	1 NO + 1 NC
No. of built-in Conformance to standard					
Conventional thermal current, I_{th} at 60°C		A	10	10	10
Endurance of auxiliary Contacts		millions	0.5	0.5	0.5
AC-15 rating, 50 Hz	24-110 V	A	6	6	6
	220-240 V	A	4	4	4
	360-440 V	A	4	4	4
	525-600 V	A	1.2	1.2	1.2
DC-13 rating	24 V	A	6	6	6
	110-125 V	A	1.1	1.1	1.1
	250 V	A	0.55	0.55	0.55
	480 V	A	0.31	0.31	0.31
	500 V	A	0.27	0.27	0.27
	600 V	A	0.2	0.2	0.2
Terminal capacity (Solid or multi strand conductors)		mm^2	2 x 2.5	2 x 2.5	2 x 2.5
Coil					
Voltage available Uc	50 / 60 Hz	V	24, 42, 48, 110, 220, 240, 320, 360, 380, 415, 525	24, 42, 48, 110, 220, 240, 320, 360, 380, 415, 525	24, 42, 48, 110, 220, 240, 320, 360, 380, 415, 525
Pick-up	VA	VA	68	68	68
Hold-on	VA	VA	9	9	9
	Watts	W	2.8	2.8	2.8
Limits of operation	Pick-up (%Uc) 50Hz	%Uc	65 - 110	65 - 110	65 - 110
	Pick-up (%Uc) 60Hz	%Uc	85 - 110	85 - 110	85 - 110
	Drop-off (%Uc)	%Uc	35 - 55	35 - 55	35 - 55
Operating time	Closing time	ms	12 - 21	12 - 21	12 - 21
	Opening time	ms	6 - 16	6 - 16	6 - 16
Safe isolation between coil and auxiliary contacts		V	690	690	690
Overall dimensions **H x W x D**		mm^2	87 x 45 x 89	87 x 45 x 89	87 x 45 x 89
Mounting clearance (front)		mm	10	10	10
Weight		kg	0.38	0.38	0.38

Technical Details








MO 25	MO 32	MO 40	MO 45	MO 50	MO 60
CS 94567	CS 94568	CS 94569	CS 94570	CS 94572	CS 94573
8	8	8	8	8	8
-	-	-	-	-	-
10	10	10	10	10	10
0.5	0.5	0.5	0.5	0.5	0.5
6	6	6	6	6	6
4	4	4	4	4	4
4	4	4	4	4	4
1.2	1.2	1.2	1.2	1.2	1.2
6	6	6	6	6	6
1.1	1.1	1.1	1.1	1.1	1.1
0.55	0.55	0.55	0.55	0.55	0.55
0.31	0.31	0.31	0.31	0.31	0.31
0.27	0.27	0.27	0.27	0.27	0.27
0.2	0.2	0.2	0.2	0.2	0.2
2 x 2.5	2 x 2.5	2 x 2.5	2 x 2.5	2 x 2.5	2 x 2.5
24, 42, 48, 110, 220, 240, 320, 360, 380, 415, 525	24, 42, 48, 110, 220, 240, 320, 360, 380, 415, 525	24, 42, 48, 110, 220, 240, 320, 360, 380, 415, 525	24, 42, 48, 110, 220, 240, 320, 360, 380, 415, 525	24, 42, 48, 110, 220, 240, 320, 360, 380, 415, 525	24, 42, 48, 110, 220, 240, 320, 360, 380, 415, 525
77	77	77	77	144	144
9	9	9	9	15	15
3	3	3	3	6	6
65 - 110	65 - 110	65 - 110	65 - 110	75 - 110	75 - 110
85 - 110	85 - 110	85 - 110	85 - 110	85 - 110	85 - 110
35 - 55	35 - 55	35 - 55	35 - 55	35 - 55	35 - 55
12 - 21	12 - 21	12 - 21	12 - 21	11 - 20	11 - 20
6 - 16	6 - 16	6 - 16	6 - 16	6 - 13	6 - 13
690	690	690	690	690	690
87 x 45 x 93.5	87 x 45 x 93.5	87 x 45 x 93.5	87 x 45 x 93.5	123.6 x 55 x 122.1	123.6 x 55 x 122.1
10	10	10	10	10	10
0.44	0.44	0.44	0.44	1.1	1.1

Technical Details

- Range from 9A-300A AC-3e
- Range 140A-300A available with conventional/universal AC/DC electronic coil version
- Low pick-up VA consumption
- Standardized accessories for 9A-110A & 140A-300A range
- DIN Rail mounting facility upto 110A
- Compact dimensions saving precious panel space
- Lug as well as Lugless termination
- RoHS compliant





		Units	MO 9	MO 12	MO 18
Catalogue no.			CS 94833	CS 94834	CS 94835
Type of Terminal					
Main terminal capacity No.of cable x (Max.Range - Min. Range)	Cable with Ferrule type Lug	mm		1 x (1.5-4), 2 x (1-2.5)	
	Cable with Pin type Lug	mm		1 x (1.5-6)	
	Cable with Fork type Lug	mm		1 x (1.5-4), 2 x (1.5-4)	
	Cable with Ring type Lug	mm		-	
	Cable with Lug (spreader links)	(mm)	2 x 16	2 x 16	2 x 16
	Busbar (with spreader)	(mm)	12	12	12
	Busbar (without spreader)	mm	-	-	-
	Solid conductors	mm	2 x 10	2 x 10	2 x 10
	Multi strand conductors	mm		1 x (1.5-6), 2 x (1.5-4)	
Tightening Torque	Main Pole Terminal	Nm	M3.5 / 1.2	M3.5 / 1.2	M3.5 / 1.2
	Aux. Pole / Coil / Add on block Terminal		M3.5 / 1.1	M3.5 / 1.1	M3.5 / 1.1
DC ratings with 3 poles in series and AC coil operation	DC 1 (110V)	A	20	25	25
	DC 1 (220V)	A	20	25	25
	DC 3 (110V)	A	20	25	25
	DC 3 (220V)	A	15	18	18
	DC 5 (110V)	A	12	18	20
	DC 5 (220V)	A	7.5	8	10

^ keeping (22mm-25mm) clearance

Technical Details








MO 25	MO 32	MO 40	MO 45	MO 50	MO 60
CS 94567	CS 94568	CS 94569		CS 94572	CS 94573
Philip and Slot Head Combination Screw				Box Clamp with Slot Head Screw	
1 x (4-10), 2 x (2.5-6)				1 x (10-35), 2 x (6-25)	
1 x (4-10), 2 x (2.5)				1 x (10-35), 2 x (6-25)	
1 x (4-10), 2 x (2.5-6)				-	
-				-	
2 x 16	2 x 16	2 x 16	2 x 16	2 x 50	2 x 50
12	12	12	12	18	18
-	-	-	-	-	-
2 x 10	2 x 10	2 x 10	2 x 10	-	-
1 x (4-10), 2 x (2.5-6)				1 x (10-35), 2 x (6-35)	
M4 / 2.5	M4 / 2.5	M4 / 2.5	M4 / 2.5	M6 / 4	M6 / 4
M3.5 / 1.1	M3.5 / 1.1	M3.5 / 1.1	M3.5 / 1.1	M3.5 / 1.1	M3.5 / 1.1
32	40	40	40	65	70
32	40	40	40	65	70
32	40	40	40	65	70
32	40	40	40	65	70
25	32	40	40	50	60
12	20	22	25	35	35

Technical Details

- Range from 9A-300A AC-3e
- Range 140A-300A available with conventional/universal AC/DC electronic coil version
- Low pick-up VA consumption
- Standardized accessories for 9A-110A & 140A-300A range
- DIN Rail mounting facility upto 110A
- Compact dimensions saving precious panel space
- Lug as well as Lugless termination
- RoHS compliant





		Units	MO 70	MO 80	MO 95
Catalogue no.			CS 94574	CS 94576	CS 94577
Conformance to standards					
Power Contacts					
No. of poles			3	3	3
Rated insulation voltage, U_i		V	1000	1000	1000
Rated impulse withstand voltage, U_{imp}		kV	8	8	8
Rated kW	240 V AC	kW	18.6	22.0	25
	415 - 500 V AC	kW	37	40	45
	690 V AC	kW	40	45	45
Rated making capacity	240 V AC	A	1000	1500	1500
	415 - 500 V AC	A	1000	1500	1500
	690 V AC	A	540	600	600
Rated breaking capacity	240 V AC	A	900	1200	1200
	415 - 500 V AC	A	900	1200	1200
	690 V AC	A	450	500	500
Rated operational current, I_e at60°C Motor duty : 3Ø, 415 V, 50 Hz	Utilization category AC-1	A	100	125	125
	Utilization category AC-2	A	70	80	95
	Utilization category AC-3e	A	70	80	95
	Utilization category AC-4	A	70	80	95
	Utilization category AC-4 (2,00,000 operations)	A	27	34	37
Rated Operational current, I_e at 60°C Motor duty : 3Ø, 690 V, 50 Hz	Utilization category AC-3e	A	45	50	50
Permissible short time ratings	1 Seconds	A	1000	1320	1320
	10 Seconds	A	650	800	800
	30 Seconds	A	370	500	500
	1 Minute	A	250	400	400
	10 Minute	A	120	170	170
	15 Minute	A	110	160	160
Mechanical life, No. of operating cycles		millions	10	10	10
Max. frequency of operations: Operating cycles/hr	Mechanical	cy/hr	3600	3600	3600
	Utilization category AC-1	cy/hr	3000	3000	3000
	Utilization category AC-2	cy/hr	750	750	750
	Utilization category AC-3e	cy/hr	750	750	750
	Utilization category AC-4	cy/hr	150	150	150
Vibration resistance conforming to IEC 60068-2-6					
Ambient temperature around the device	Service temperature	°C	-40°C to + 80°C		
	Storage temperature	°C			
Altitude without deration		m			
Degree of Pollution					
Degree of protection					
Protective treatment as per IEC 6006 - 2 - 30					
Fuse protection against short circuit			HN,00 160	HN,00 160	HN,0 200
Watt loss per pole	Utilization category AC-1	W	10.5	12.5	12.5
	Utilization category AC-3e	W	6	6.4	8.1

* Universal AC/DC electronic coil version
# PIs refer ordering data for electronic coil version

Technical Details








MO 110	MO 140#	MO 185#	MO 225#	MO 250#	MO 300#
CS 94578	CS 95000	CS 95001	CS 95002	CS 94441	CS 94440
IS/IEC 60947-4-1, IEC 60947-4-1, EN 60947-4-1					
3	3	3	3	3	3
1000	1000	1000	1000	1000	1000
8	8	8	8	8	8
30	40	55	63	75	90
55	80	95	125	150	180
60	132	160	220	250	280
1500	1800	2400	3000	4000	4500
1500	1680	2700	2700	3600	4000
780	1680	2220	2700	3000	3600
1200	1600	1850	2500	3200	4000
1200	1400	2250	2250	3000	3600
650	1400	1850	2250	2500	3000
140	250	275	275	400	500
110	140	185	225	250	300
110	140	185	225	250	300
110	140	185	225	250	300
41	60	75	85	100	130
65	140	185	225	250	300
1320	2000	3000	3000	3500	3500
800	1800	2000	2000	2400	2400
509	1000	1400	1400	1500	1800
400	750	1100	1100	1100	1300
170	550	600	600	550	750
160	250	275	275	400	500
10	10	10	10	10	10
3600	3600/3600*	3600/3600*	3600/3600*	3600/2400*	3600/2400*
3000	3000	3000	3000	3000	3000
750	750	750	750	750	750
750	750	750	750	750	750
150	150	150	150	150	150
5..... 300 Hz: 3g					
-20°C to + 60°C					
-15°C to + 80°C					
3000					
3					
IP 20					
TH					
HN,0 200	HN,1 250	HN,1 315	HN,1 315	HN,2 400	HN,2 500
12.8	16	18	20	25	32
8.25	11	11	13	15	20

Technical Details

- Range from 9A-300A AC-3e
- Range 140A-300A available with conventional/universal AC/DC electronic coil version
- Low pick-up VA consumption
- Standardized accessories for 9A-110A & 140A-300A range
- DIN Rail mounting facility upto 110A
- Compact dimensions saving precious panel space
- Lug as well as Lugless termination
- RoHS compliant





		Units	MO 70	MO 80	MO 95
Catalogue no.			CS 94574	CS 94576	CS 94577
Auxiliary Contacts					
No. of additional aux. contact possible			8	8	8
No. of built-in auxiliary contacts					
Conventional thermal current, I^{th} at 55°C		A	10	10	10
Endurance of auxiliary Contacts		millions	0.5	0.5	0.5
AC-15 rating, 50 Hz	24-110 V	A	6	6	6
	220-240 V	A	4	4	4
	360-440 V	A	4	4	4
	525-600 V	A	1.2	1.2	1.2
DC-13 rating	24 V	A	6	6	6
	110-125 V	A	1.1	1.1	1.1
	250 V	A	0.55	0.55	0.55
	480 V	A	0.31	0.31	0.31
	500 V	A	0.27	0.27	0.27
	600 V	A	0.2	0.2	0.2
Terminal capacity (Solid or multi strand conductors)		mm^2	2 x 2.5	2 x 2.5	2 x 2.5
Coil					
Voltage available Uc	50 / 60 Hz	V	24, 42, 48, 110, 220, 240, 320, 360, 380, 415, 525	24, 42, 48, 110, 220, 240, 320, 360, 380, 415, 525	24, 42, 48, 110, 220, 240, 320, 360, 380, 415, 525
Pick-up	VA	VA	144	240	240
Hold-on	VA	VA	15	25	25
	Watts	W	6	9	9
Limits of operation	Pick-up (%Uc) 50Hz	%Uc	75 - 110	75 - 110	75 - 110
	Pick-up (%Uc) 60Hz	%Uc	85 - 110	85 - 110	85 - 110
	Drop-off (%Uc)	%Uc	35 - 55	35 - 55	35 - 55
Electronic Coil					
Voltage available Uc	50 / 60 Hz	V	-	-	-
Pick-up	VA	VA	-	-	-
Hold-on	VA	VA	-	-	-
	Watts	W	-	-	-
Limits of operation	Pick-up (%Uc) 50Hz	%Uc	-	-	-
	Pick-up (%Uc) 60Hz	%Uc	-	-	-
	Drop-off (%Uc)	%Uc	-	-	-
Operating time	Closing time	ms	11 - 20	15 - 24	15 - 24
	Opening time	ms	6 - 13	6 - 23	6 - 23
Safe isolation between coil and auxiliary contacts		V	690	690	690
Overall dimensions **H x W x D**		mm^3	123.6 x 55 x 122.1	135 x 70 x 135	135 x 70 x 135
Mounting clearance (front)		mm	10	10	10
Weight		kg	1.1	1.6	1.6

Pls refer ordering data for electronic coil version

Technical Details








MO 110	MO®140	MO®185	MO®225	MO®250	MO®300
CS 94578	CS 95000	CS 95001	CS 95002	CS 94441	CS 94440
8	4	4	4	4	4
	2 NO+2 NC	2 NO+2 NC	2 NO+2 NC	2 NO+2 NC	2 NO+2 NC
10	10	10	10	10	10
0.5	0.5	0.5	0.5	0.5	0.5
6	6	6	6	6	6
4	4	4	4	4	4
4	4	4	4	4	4
1.2	1.2	1.2	1.2	1.2	1.2
6	6	6	6	6	6
1.1	1.1	1.1	1.1	1.1	1.1
0.55	0.55	0.55	0.55	0.55	0.55
0.31	0.31	0.31	0.31	0.31	0.31
0.27	0.27	0.27	0.27	0.27	0.27
0.2	0.2	0.2	0.2	0.2	0.2
2 x 2.5	2 x 2.5	2 x 2.5	2 x 2.5	2 x 2.5	2 x 2.5
24, 42, 48, 110, 220, 240, 320, 360, 380, 415, 525	24, 42, 48, 110, 220, 240, 320, 360, 380, 415, 525	24, 42, 48, 110, 220, 240, 320, 360, 380, 415	24, 42, 48, 110, 220, 240, 320, 360, 380, 415, 525	24, 42, 48, 110, 220, 240, 320, 360, 380, 415, 525	24, 42, 48, 110, 220, 240, 320, 360, 380, 415, 525
240	1000	1000	1000	1400	1400
25	50	50	50	65	65
9	18	18	18	23	23
75 - 110	75 - 110	75 - 110	75 - 110	75 - 110	75 - 110
85 - 110	85 - 110	85 - 110	85 - 110	85 - 110	85 - 110
35 - 55	35 - 55	35 - 55	35 - 55	35 - 55	35 - 55
-	110 - 240	110 - 240	110 - 240	110-240	110 - 240
-	300	300	300	350	350
-	17	17	17	17	17
-	6	6	6	6	6
-	75 - 110	75 - 110	75 - 110	75 - 110	75 - 110
-	75 -110	75 - 110	75 - 110	75 - 110	75 - 110
-	< 60V	< 60V	< 60V	< 60V	< 60V
15 - 24	15 - 40	15 - 40	15 - 40	15 - 40	15 - 40
6 - 23	7 - 20	7 - 20	7 - 20	7 - 20	7 - 20
690	690	690	690	690	690
135 x 70 x 135	197.5 x 120 x 170	197.5 x 120 x 170	197.5 x 120 x 170	225 x 145 x 190	225 x 145 x 190
10	10	10	10	10	10
1.6	4.24	4.6	4.6	6	6

Technical Details

- Range from 9A-300A AC-3e
- Range 140A-300A available with conventional/universal AC/DC electronic coil version
- Low pick-up VA consumption
- Standardized accessories for 9A-110A & 140A-300A range
- DIN Rail mounting facility upto 110A
- Compact dimensions saving precious panel space
- Lug as well as Lugless termination
- RoHS compliant





		Units	MO 70	MO 80	MO 95
Catalogue no.			CS 94574	CS 94576	CS 94577
Type of Terminal					Box Clamp with Slot Head Screw
Main terminal capacity No.of cable x (Max.Range - Min. Range)	Cable with Ferrule type Lug	mm	1 x (10-35), 2 x (6-25)		1 x (25-70), 2 x (16-35)
	Cable with Pin type Lug	mm	1 x (10-35), 2 x (6-25)		1 x (25-70), 2 x (16-35)
	Cable with Fork type Lug	mm	-		-
	Cable with Ring type Lug	mm	-		-
	Cable with Lug (spreader links)	(mm)	2 x 50	2 x 95	2 x 95
	Busbar (with spreader)	(mm)	18	25	25
	Busbar (without spreader)	mm	-	-	-
	Solid conductors	mm	-	-	-
	Multi strand conductors	mm	1 x (10-35), 2 x (6-35)		1 x (25-70), 2 x (16-70)
Tightening Torque	Main Pole Terminal	Nm	M6 / 4	M8 / 5	M8 / 5
	Aux. Pole/Coil/Add on block Terminal	Nm	M3.5 / 1.1	M3.5 / 1.1	M3.5 / 1.1
DC ratings with 3 poles in series and AC coil operation	DC 1 (110V)	A	80	100	100
	DC 1 (220V)	A	80	100	100
	DC 3 (110V)	A	80	100	100
	DC 3 (220V)	A	80	100	100
	DC 5 (110V)	A	70	80	95
	DC 5 (220V)	A	35	63	70

^ keeping (22mm-25mm) clearance # Pls refer ordering data for electronic coil version

Technical Details








MO 110	MO 140	MO 185	MO 225	MO 250	MO 300
CS 94578	CS 95000	CS 95001	CS 95002	CS 94441	CS 94440
			Hexagon Head Screw		
		-		-	-
		-		-	-
		-		-	-
		2 x 16		-	-
2 x 95	2 x 185	2 x 185	2 x 185	2 x 240	2 x 240
25	28	28	28	40	40
-	25	25	25	32	32
-	-	-	-	-	-
		-		-	
M8 / 5	M10 / 20	M10 / 20	M10 / 20	M10 / 30	M10 / 30
M3.5 / 1.1	M3.5 / 1.2	M3.5 / 1.2	M3.5 / 1.2	M3.5 / 1.2	M3.5 / 1.2
120	140	185	225	260	300
120	140	185	225	260	300
120	140	185	225	260	300
120	140	185	225	260	300
110	140	185	225	250	300
80	125	185	225	250	300

Accessories



Side Mounted Single Pole Add-on



RTO Relay



MO Contactor

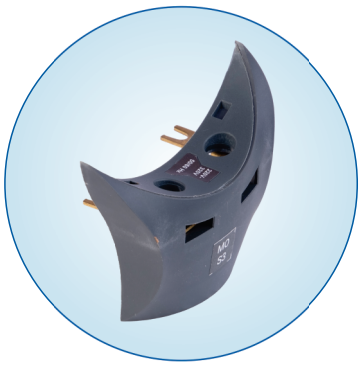

Surge Suppressor



Top Mounted Four Pole Add-on

Accessories Features

Add-on auxiliary contact block, suitable for all MO contactors



MO Top Add-on Block



Mo Side Add-on Block

Description	Type designation	Mounting Position	Contacts	Terminal Marking	Cat. Nos.
MO 9A-110A	MO-SA1L	Side Mounted First Left	1 NO + 1 NC	23 - 24, 31 - 32	CS945800000
	MO-SA1R	Side Mounted First Right	1 NO + 1 NC	33 - 34, 41 - 42	CS945810000*
	MO-SA2L	Side Mounted Second Left	1 NO + 1 NC	53 - 54, 61 - 62	CS945820000
	MO-SA2R	Side Mounted Second Right	1 NO + 1 NC	73 - 74, 81 - 82	CS945830000*
	MO-SA	Top Mounted Single Pole	1 NO	53 - 54	CS945850000
	MO-SA	Top Mounted Single Pole	1 NC	51 - 52	CS945860000
	MO-TA1	Top Mounted Two Pole	2 NO	53 - 54, 63 - 64	CS945910000
	MO-TA2	Top Mounted Two Pole	1 NO + 1 NC	53 - 54, 61 - 62	CS945920000
	MO-TA2	Top Mounted Two Pole	2 NC	51 - 52, 61 - 62	CS945930000
	MO-TA4	Top Mounted Four Pole	4 NO	53 - 54, 63 - 64, 73 - 74, 83 - 84	CS945940000
	MO-TA4	Top Mounted Four Pole	3 NO + 1 NC	53 - 54, 63 - 64, 73 - 74, 81 - 82	CS945950000
	MO-TA4	Top Mounted Four Pole	2 NO + NC	53 - 54, 63 - 64, 71 - 72, 81 - 82	CS945960000
	MO-TA4	Top Mounted Four Pole	1 NO + 3 NC	53 - 54, 61 - 62, 71 - 72, 81 - 82	CS945970000
	MO-TA4	Top Mounted Four Pole	4 NC	51 - 52, 61 - 62, 71 - 72, 81 - 82	CS945980000
MO 140A-300A	MO-HA1L	Side Mounted First Left	1 NO + 1 NC	13 - 14, 21 - 22	CS950330000
	MO-HA1R	Side Mounted First Right	1 NO + 1 NC	33 - 34, 41 - 42	CS950340000
	MO-HA2L	Side Mounted Second Left	1 NO + 1 NC	53 - 54, 61 - 62	CS950350000
	MO-HA2R	Side Mounted Second Right	1 NO + 1 NC	73 - 74, 81 - 82	CS950360000

* Right side add-on block can not be mounted on MO frame 0 (9 to18 A).

MO Spreader Link Kit



Mechanical Interlock Kit

Description	Cat. No.
MO 9-110	CS945840000
MO frame 4 with MO frame 4	CS943900000
MO frame 4 with MO frame 5	CS943910000
MO frame 5 with MO frame 5	CS943930000

Note: MO MIL Kit contains inbuilt 2 NC contacts.

Spreader Link Kit

Description	Cat. No.
MO 9 - 45#	CS942740000
MO 50 - 70#	CS940930000
MO 80 - 110#	CS940940000
MO 140 - 225#	CS910570000
MO 250 - 300	CS909400000

Spreader Link Kit consists of six moulded links with phase barriers

Accessories Features

Connecting Links



Reversing/star delta link



Paralleling link



Shorting link



Contactor MMS link

These are connecting links which connects MO Contactor and MMS as a starter. These links eliminate complete power wiring of the starter. End user has to connect only the incomer cable at MMS and load at load end of contactor. It is quick and easy to build a starter with direct connecting links. These links are available for DOL, Reverse DOL and Star Delta combination. These are available for MO contactor upto 45A and MMS frame-1 (MOG S1/H1/H1M).

DOL Starter - Link

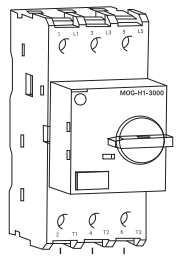

MMS

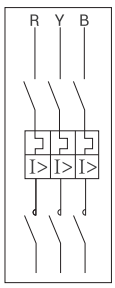

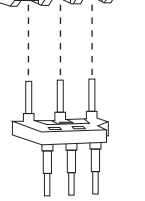

DOL LINK

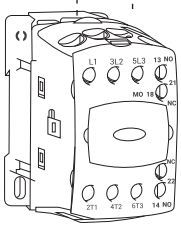

CONTACTOR

Accessories

Star Delta Starter - Link

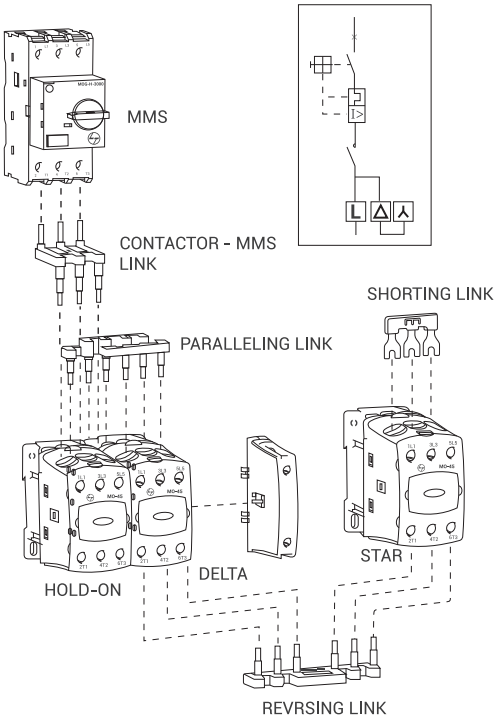

Reverse DOL Starter - Link

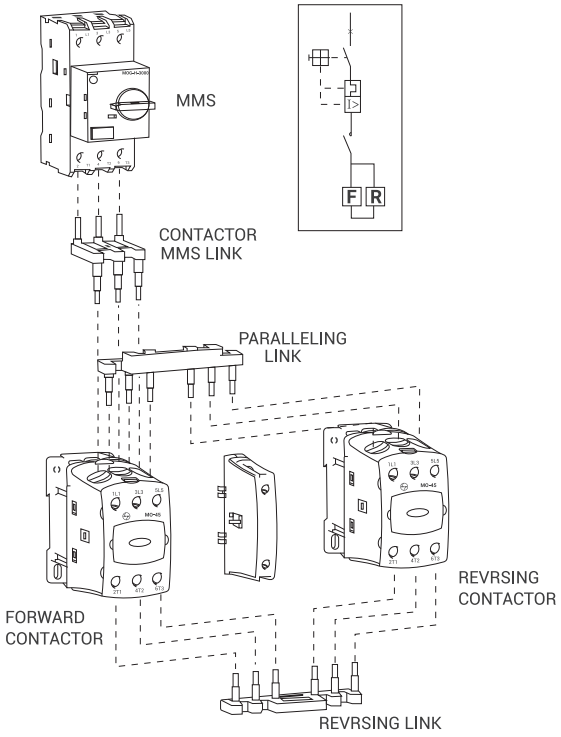

Ordering Information

Connecting Links

Description	Link set contains	Cat. No.
Connecting Link Kit DOL (MO 9-18A)	MMS to contactor link	CS903960000
Connecting Link Kit for DOL (MO25-45A)	MMS to contactor link	CS903910000
Connecting Link Kit for REV DOL (MO25-45A)	MMS to contactor link Paralleling link Reversing link	CS905480000
Connecting Link Kit REV DOL (MO 9-18A)	MMS to contactor link Paralleling link Reversing link	CS905460000
Connecting Link Kit Star-Delta (MO9-18A)	MMS to contactor link Paralleling link Reversing link Star shorting link	CS905490000
Connecting Link Kit Star-Delta(MO25-45A)	MMS to contactor link Paralleling link Reversing link Star shorting link	CS905470000

MO Contactors

Type	AC1 Rating (A)	AC3 Rating (A)	Cat. Nos.*
MO 9 (1 NO + 1 NC)	30	9	CS94833
MO 12 (1 NO + 1 NC)	32	12	CS94834
MO 18 (1 NO + 1 NC)	32	18	CS94835
MO 25	45	25	CS94567
MO 32	50	32	CS94568
MO 40	50	40	CS94569
MO 45	50	45	CS94570
MO 50	100	50	CS94572
MO 60	100	60	CS94573
MO 70	100	70	CS94574
MO 80	125	80	CS94576
MO 95	125	95	CS94577
MO 110	140	110	CS94578
MO 140	250	140	CS95000
MO 185	275	185	CS95001
MO 225	275	225	CS95002
MO 250	400	250	CS94441
MO 300	500	300	CS94440
MO 140#	250	140	CS95042
MO 185#	275	185	CS95047
MO 225#	275	225	CS95052
MO 250#	400	250	CS94456
MO 300#	500	300	CS94464

Ordering Information

Surge Suppressor

Suitable for Contactors	Suitable for coil voltage	Cat. No.
MO Frame - 0/1 MO0 Control MO C Frame - 1	110V, AC	CS91706AOOO
	220-320V, AC	CS91706BOOO
	360-415V, AC	CS91706DOOO
MO Frame - 2 MO C Frame - 2	110V, AC	CS91707AOOO
	220-320V, AC	CS91707BOOO
	360-415V, AC	CS91707DOOO

Suitable for Contactors	Suitable for coil voltage	Cat. No.
MO Frame - 3 MO C Frame - 3	110V, AC	CS91708AOOO
	220-320V, AC	CS91708BOOO
	360-415V, AC	CS91708DOOO
MO Frame - 4/5	24-110V, AC	CS91854AOOO
	220-240V, AC	CS91854BOOO
	360-525V, AC	CS91854DOOO

MO Spares

Type	Spare Contact Kit	Spare Coil *
MO 9 (1 NO + 1 NC)	CS94843OOOO	CS94841
MO 12 (1 NO + 1 NC)	CS94844OOOO	
MO 18 (1 NO + 1 NC)	CS94845OOOO	
MO 25	CS96383OOOO	CS96317
MO 32	CS96384OOOO	
MO 40	CS96385OOOO	
MO 45	CS96386OOOO	
MO 50	CS96387OOOO	CS96318
MO 60	CS96388OOOO	
MO 70	CS96389OOOO	
MO 80	CS96390OOOO	CS96319
MO 95	CS96391OOOO	
MO 110	CS96392OOOO	
MO 140	CS90357OOOO	CS90356
MO 185	CS90358OOOO	
MO 225	CS90359OOOO	
MO 250	CS94444OOOO	CS94442
MO 300	CS94443OOOO	
MO 140#	CS90357OOOO	CS90855
MO 185#	CS90358OOOO	
MO 225#	CS90359OOOO	
MO 250#	CS94444OOOO	CS90738
MO 300#	CS94443OOOO	

* Add 4 digit suffix as per required coil voltage given below.
# Universal AC/DC electronic coil version
# Ordering Suffix for coil voltage band 110 - 240 V is BOOO, 240-415V is DOOO

Ordering Suffix for Coil Voltages

Std Coil Voltage	24	42	48	110	220	240	320	360	380	415	525
Ordering Suffix - 50 / 60 Hz	GOOO	HOOO	JOOO	AOOO	KOOO	BOOO	ROOO	COOO	LOOO	DOOO	MOOO

Electrical Life Curves

Utilisation Category AC-3

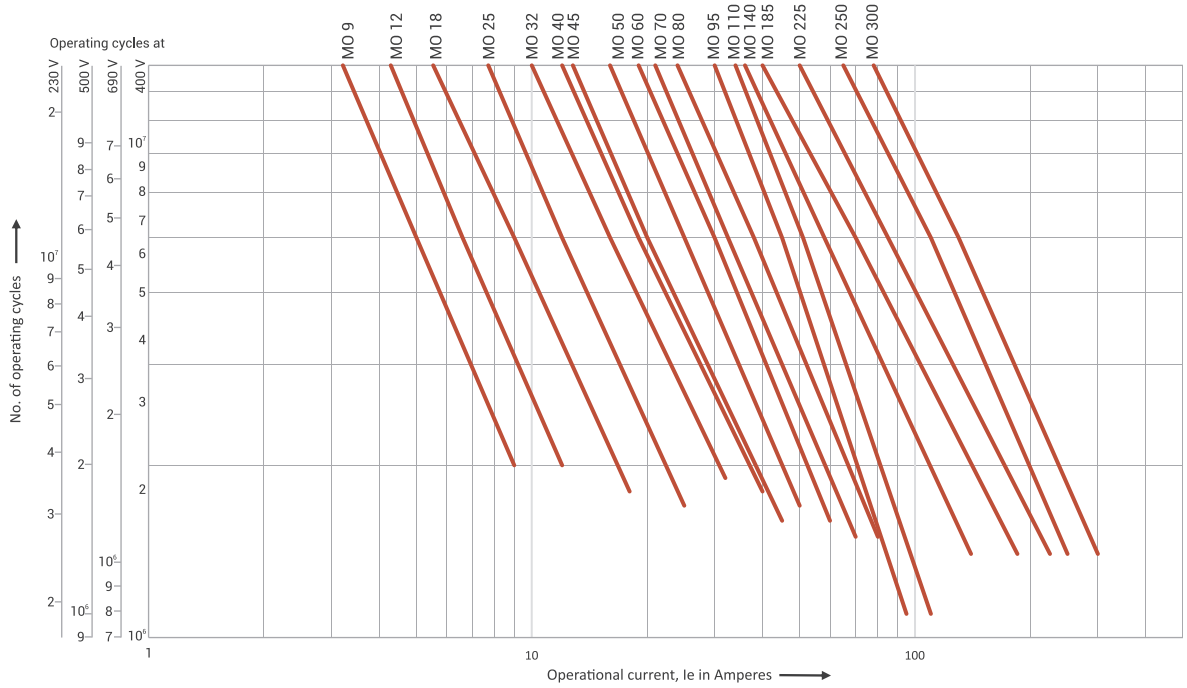

Utilisation Category AC-4

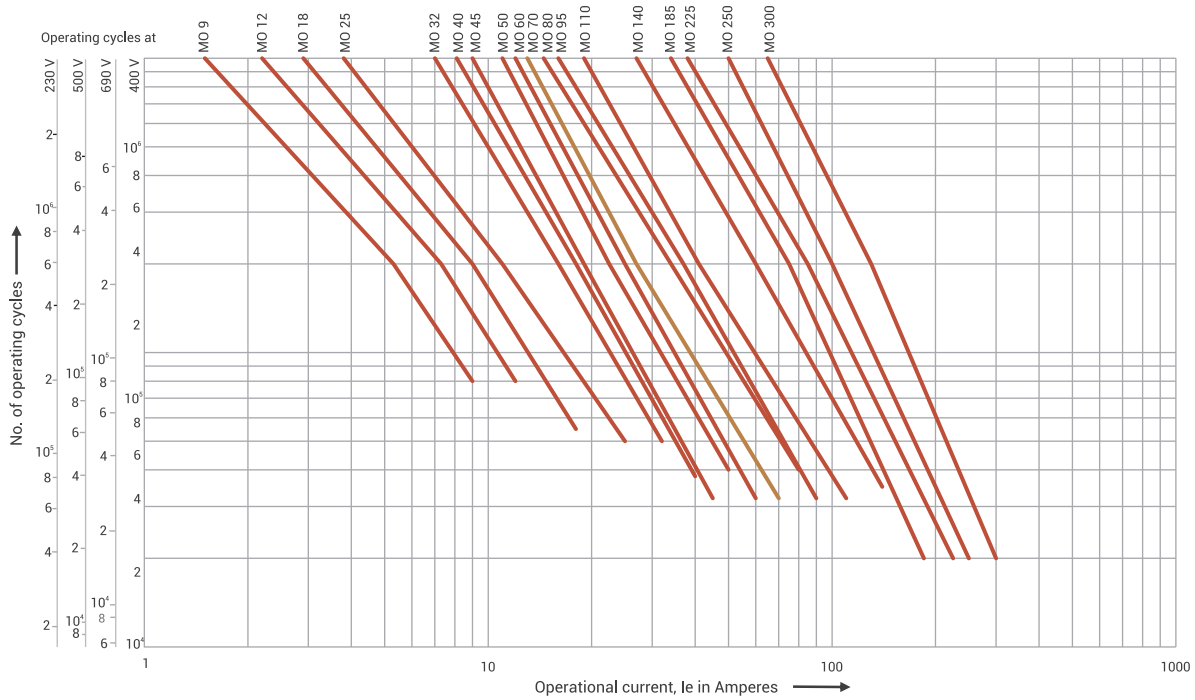

Electrical Life Curves

MO 9-18

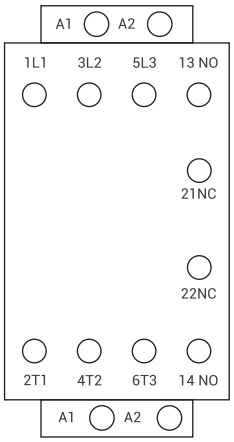

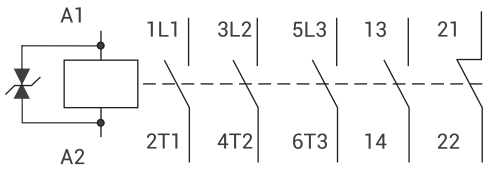

MO 25-110

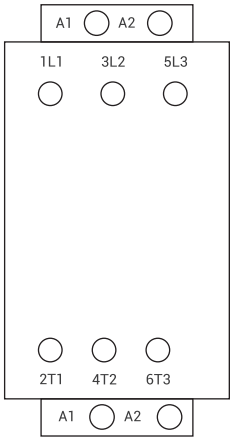

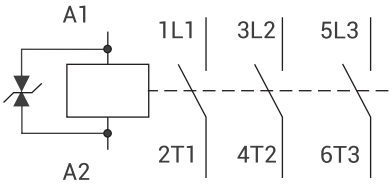

MO 140-300

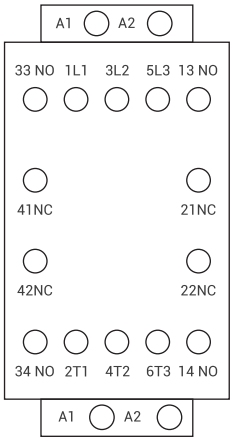

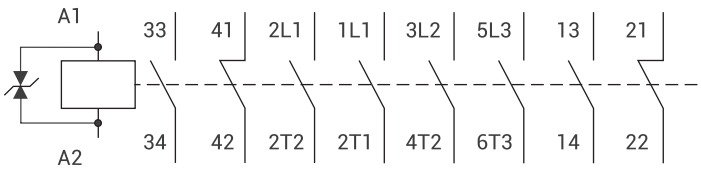

All dimensions in mm.

Electrical Life Curves

Contact Travel Diagram

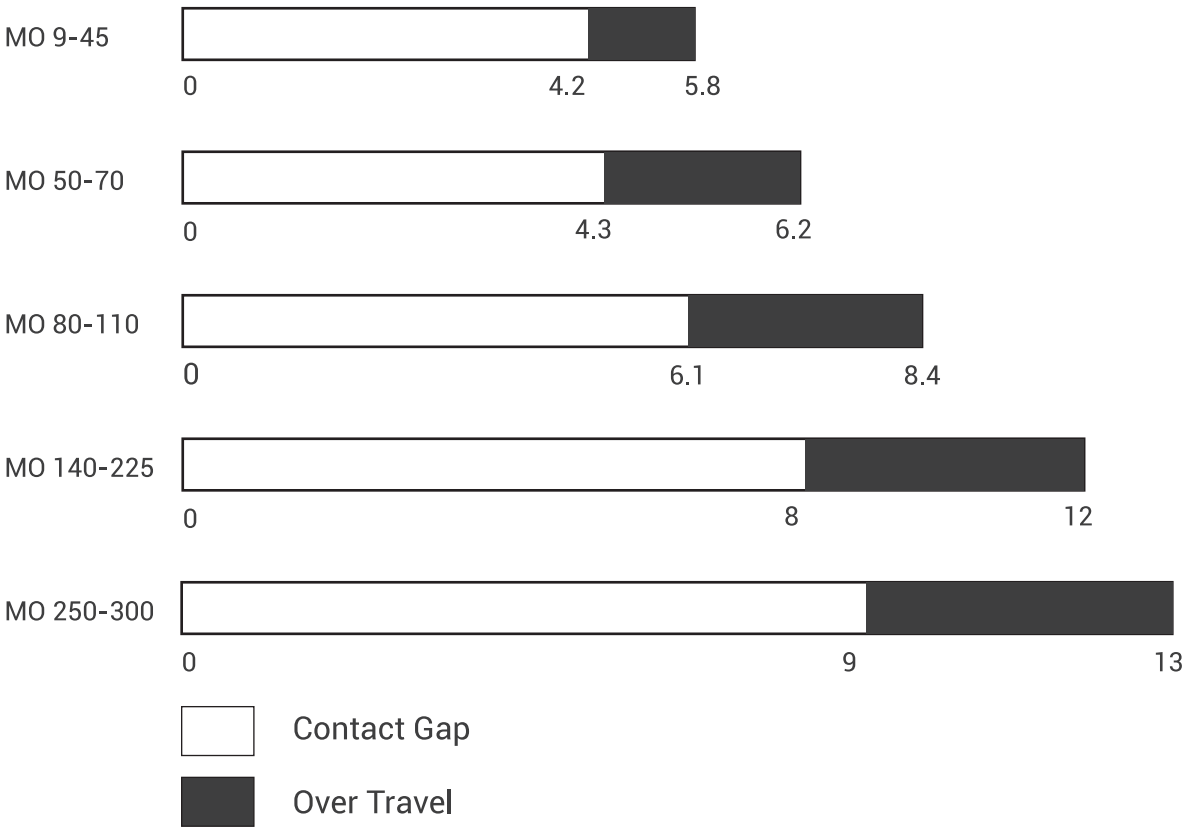

Mounting Position

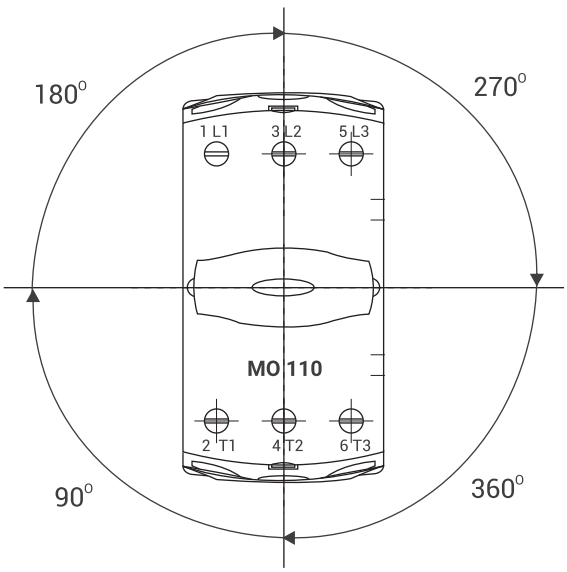

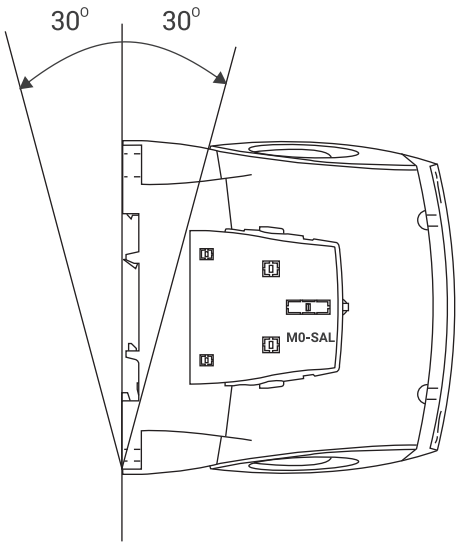

All dimensions in mm.

Over all Dimensions

MO Frame 0: 9, 12, 18

Overall Dimensions with Auxiliary Contact Block

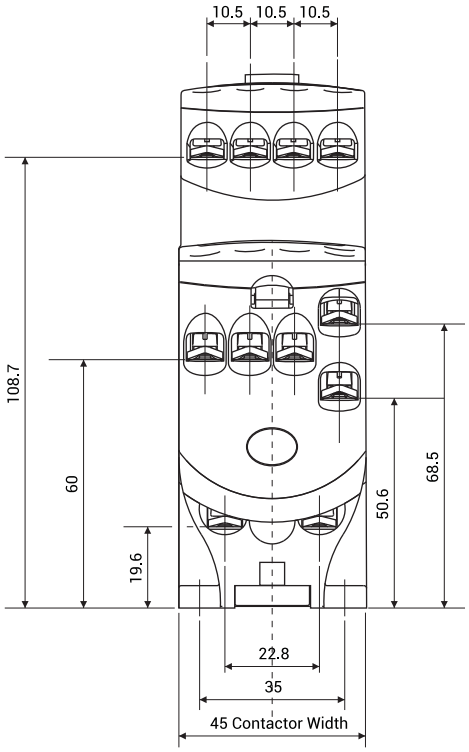

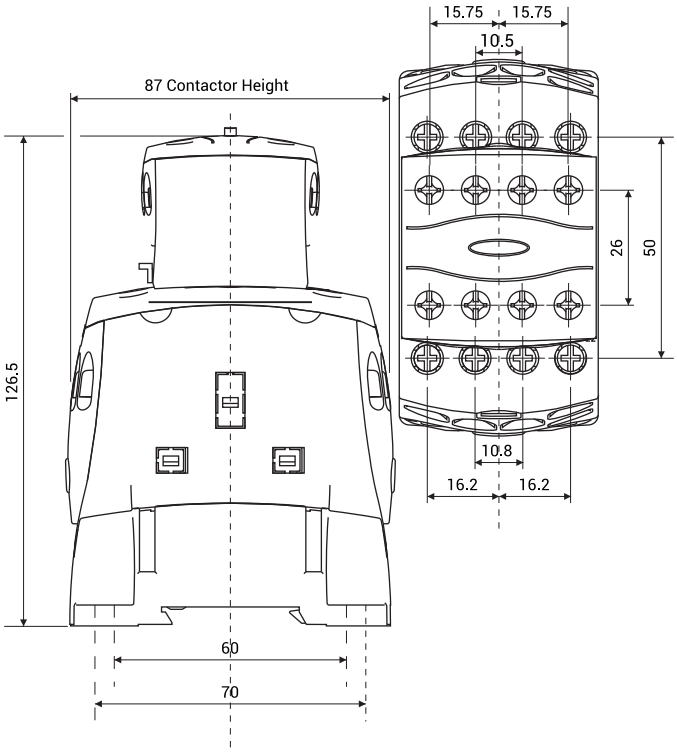

Overall Dimensions with Mechanical Interlock

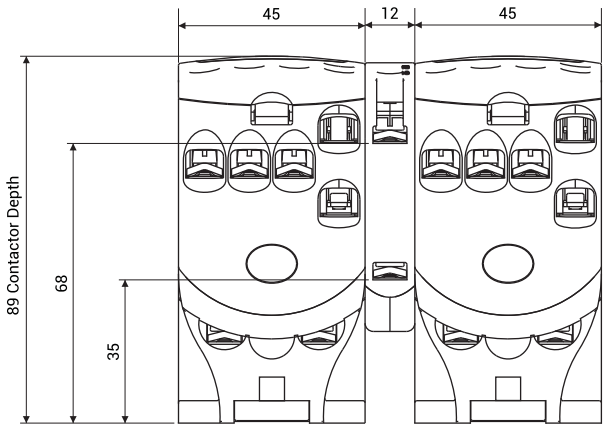

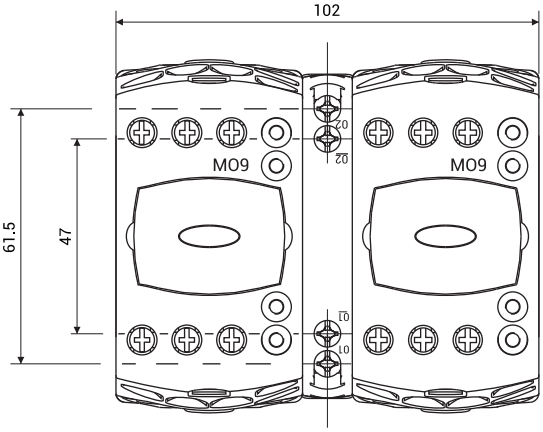

All dimensions in mm.

Over all Dimensions

MO Frame I: 25, 32, 40, 45

Overall Dimensions with Auxiliary Contact Block

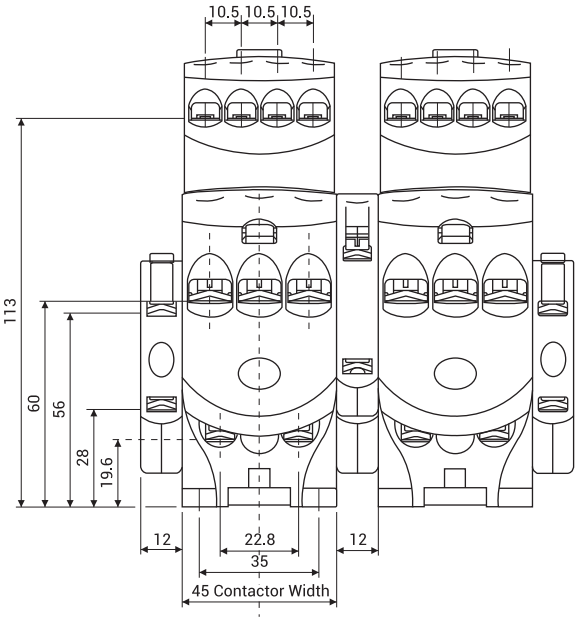

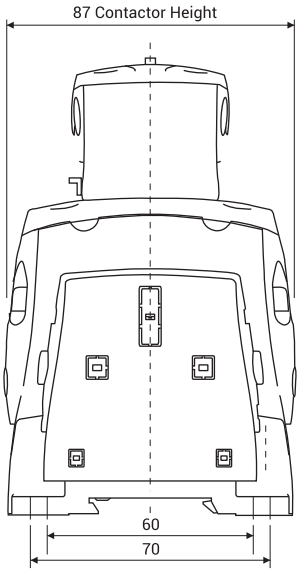

Overall Dimensions with Mechanical Interlock

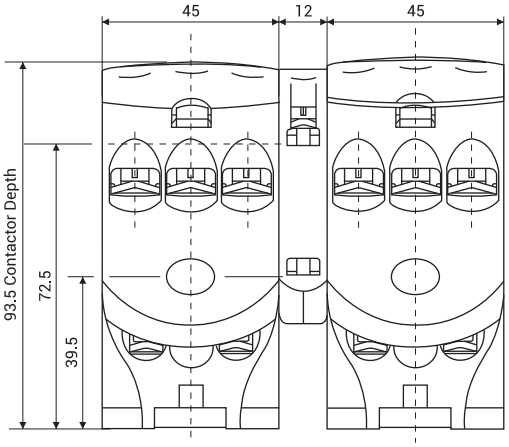

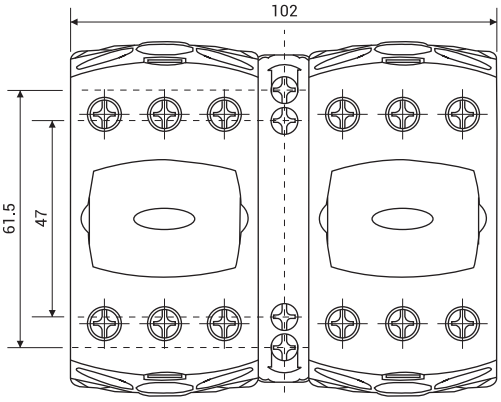

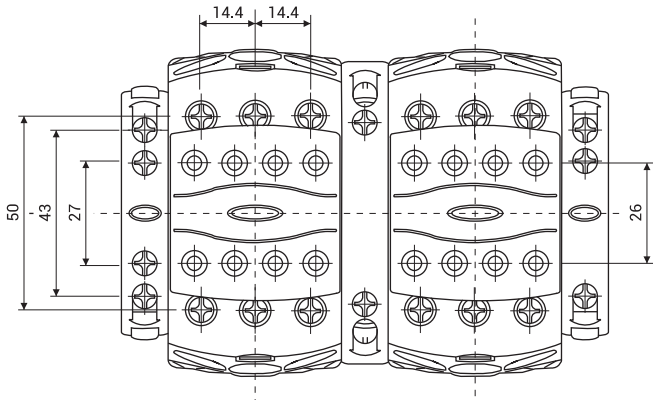

All dimensions in mm.

Over all Dimensions

MO Frame II: 50, 60, 70

Overall Dimensions with Auxiliary Contact Block

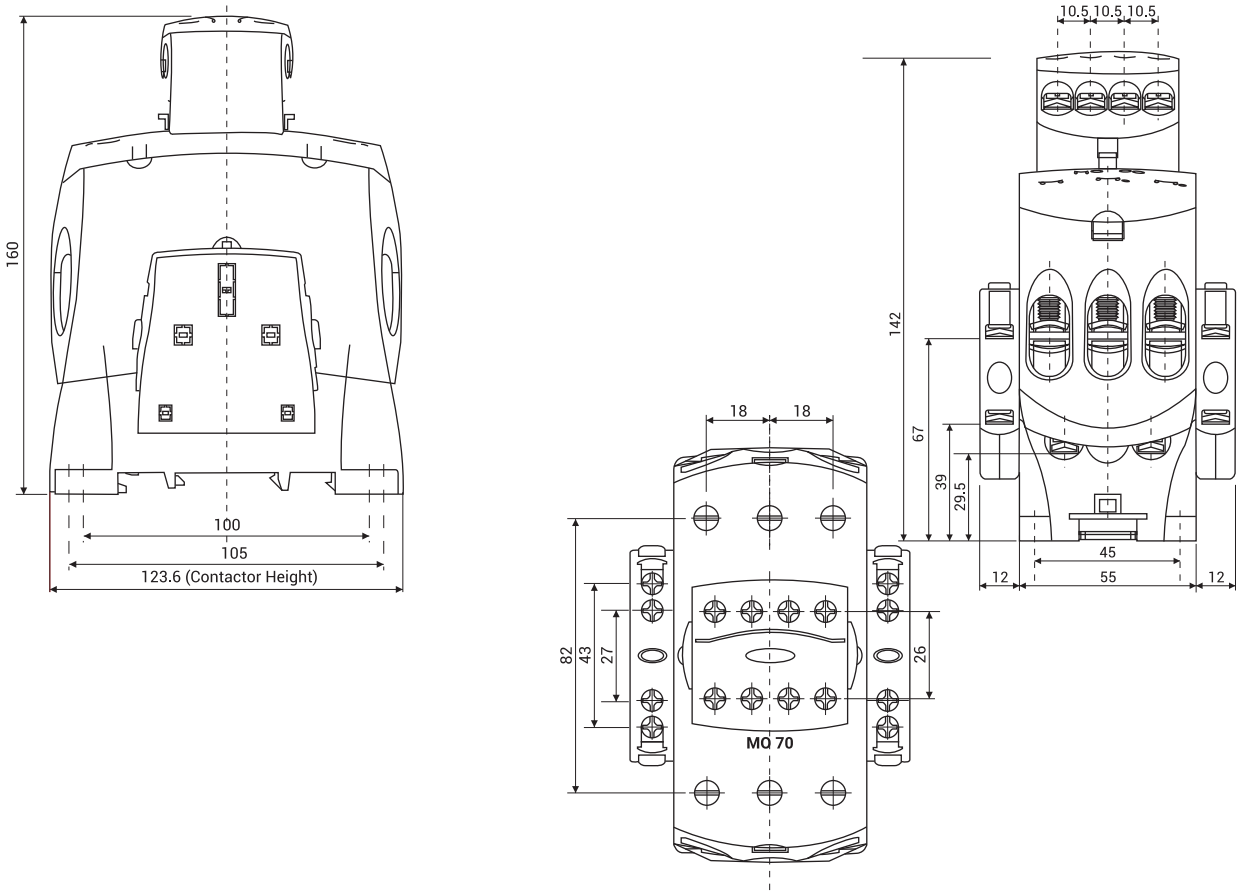

Overall Dimensions with Mechanical Interlock

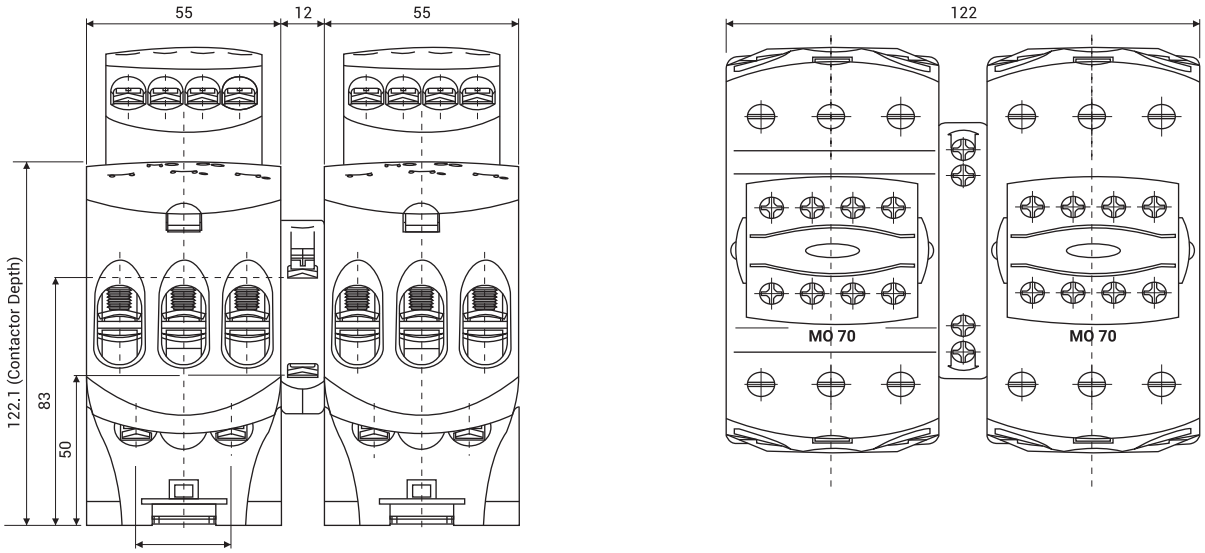

All dimensions in mm.

Over all Dimensions

MO Frame III: 80, 95, 110

Overall Dimensions with Auxiliary Contact Block

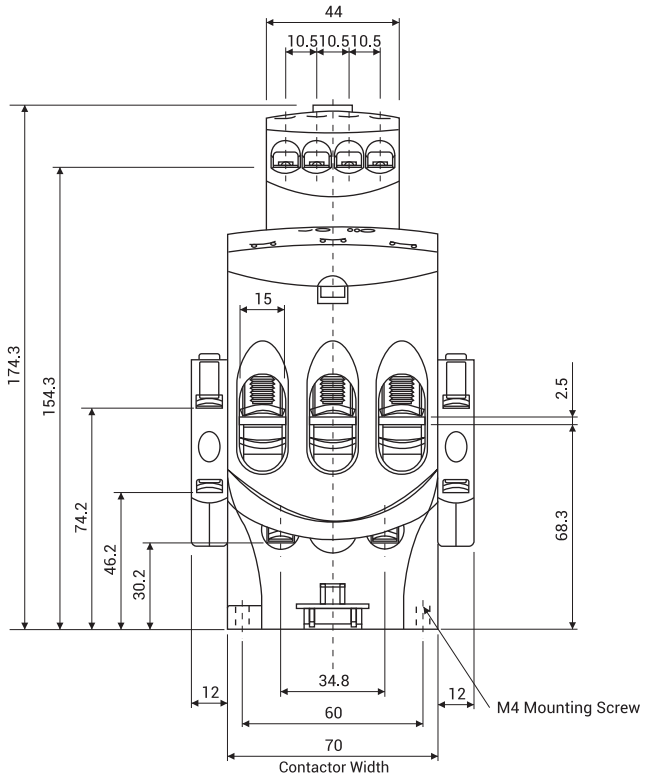

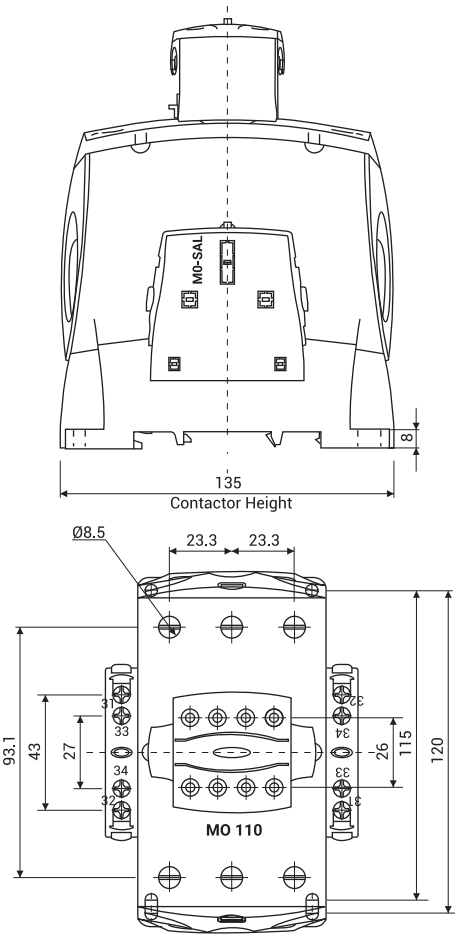

MO Frame III: 80, 95, 110

Overall Dimensions with Mechanical Interlock

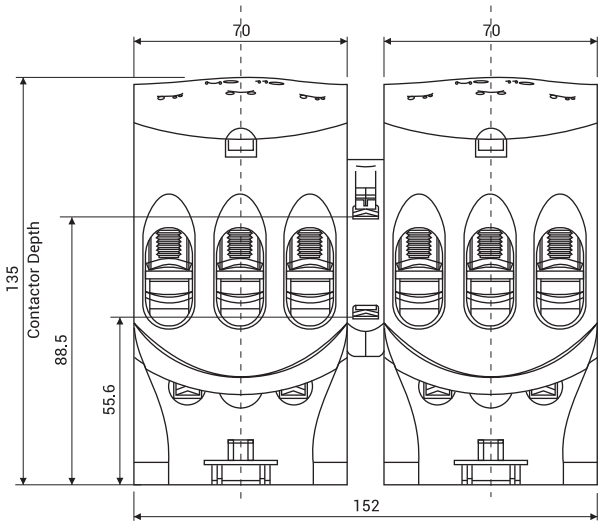

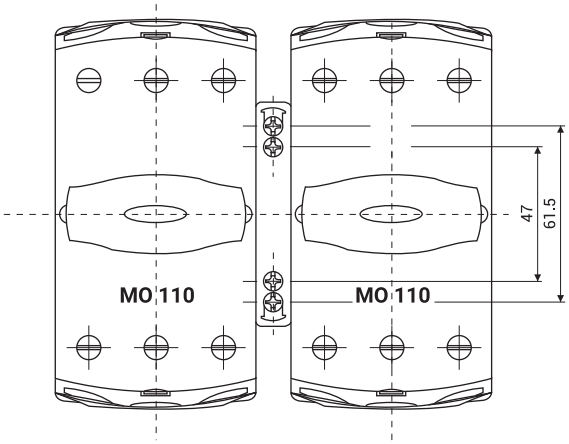

Note: Mechanical interlock kit can be fitted even with side auxiliary contacts in that case width will increase by 12 mm per auxiliary contact block.

All dimensions in mm.

Over all Dimensions

MO 140/185,225

Overall Dimensions

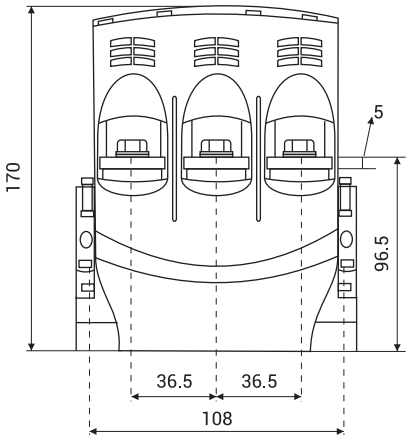

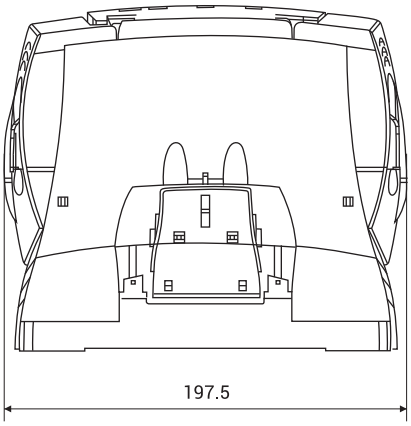

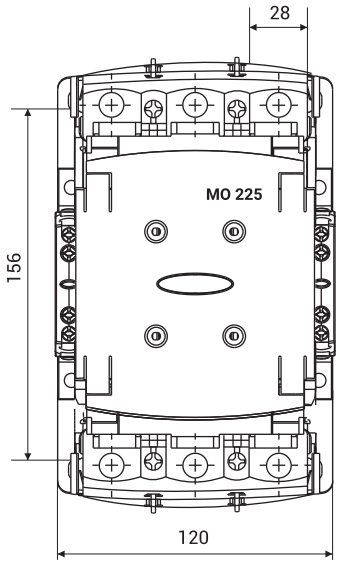

Overall Dimensions with Spreader Link

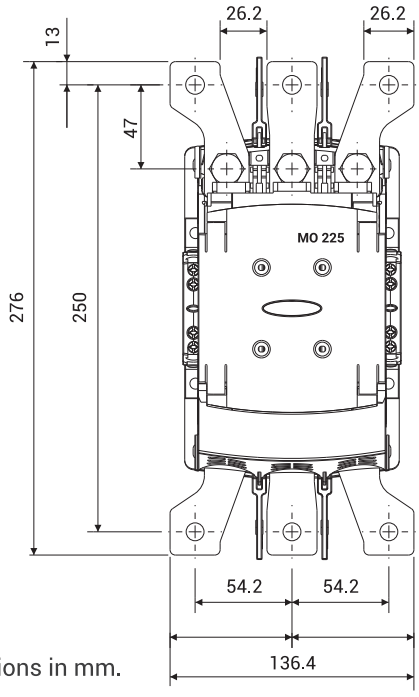

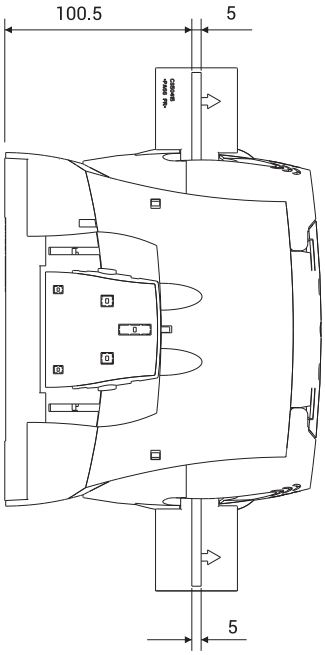

All dimensions in mm.

Over all Dimensions

MO 250/300

Overall Dimensions

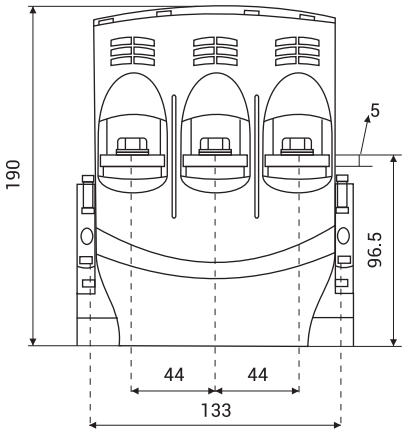

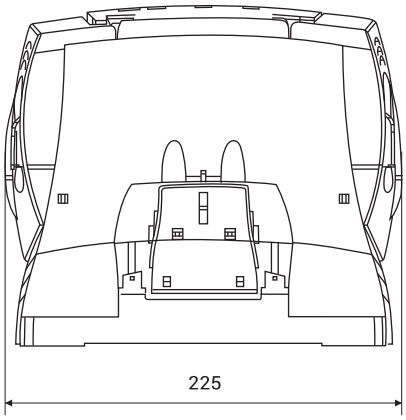

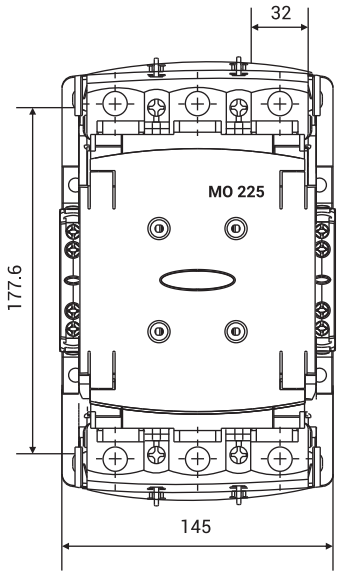

Overall Dimensions with Spreader Link

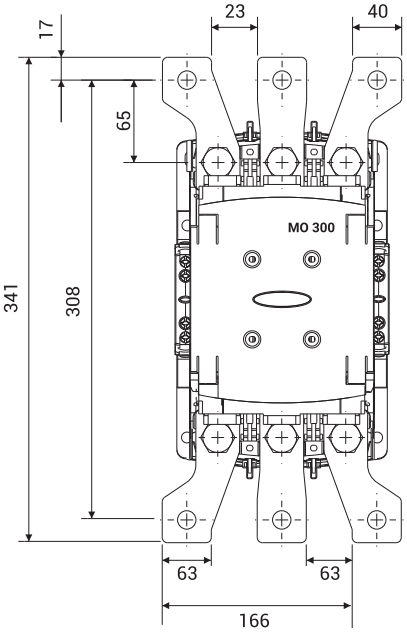

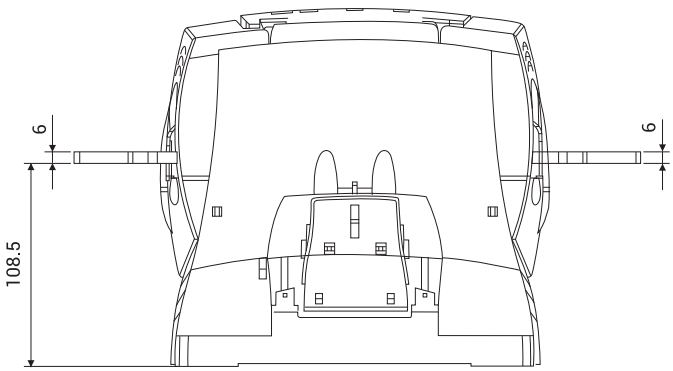

All dimensions in mm.





RTO Thermal Overload Relays

RTO Thermal Overload Relays complement MO range of contactors and can be directly mounted on them. The relays are ambient temperature compensated and are phase failure sensitive. The relays have a front access to START and STOP/RESET buttons and are provided with three contacts for Alarm, Trip and Start.

Salient Features

RTO

THERMAL OVERLOAD RELAYS



Lauritz Knudsen introduces RTO range of Thermal Overload Relays to complement the MO range of contactors. RTO thermal overload relays are available in 26 ranges and 3 frame sizes. The range is available from 0.23A to 375A. RTO range of Thermal Overload Relays provide protections against overload and single phasing and are modular in design.

Features

- Visual status indication-tripped / non-tripped from front
- Phase failure sensitive
- Ambient temperature compensated
- Auto manual / Reset function
- Test function-simulates the tripping of the Relay from the front
- Front access to START and STOP / RESET buttons
- Three contacts: Alarm, Trip and Start
- Isolated alarm circuit (N.O.) contact
- Sealable in OFF condition
- Sealable transparent top cover
- Direct mounting on MO contactors

Accessories

- Separate mounting kit
- Reset cord

Technical Details






Type	Units	RTO-1	RTO-2	RTO-3	RTO-4
Main Circuit					
Conformance to Standards		IS/IEC 60947-4-1			
Mounting		Direct / Separate			Separate
Direct Mounting on Contactors		MO 9 - 45	MO 50 - 70	MO 80 - 110	MO 140 - 300
Degree of Protection		IP 20			
Rated Insulation Voltage U_i	V	1000			
Rated Impulse Withstand U_{imp}	kV	8			
Rated Operational Voltage	V	415			
Type of Operation		Direct Acting, Trip Free Mechanism			
Trip Class	A	class 10 A, Fixed			
Temp Compensation	°C	-20°C to +55°C			
Main Terminal Capacity (Cable)	mm^2	Solid - 2 x 2.5 to 10 Finely Stranded - 2 x 2.5 to 6	Solid - 2 x 6 to 35 Finely stranded - 2 x 6 - 25	Solid - 2 x 10 to 70 Finely stranded - 2 x 10 to 50	Solid - 2 X 2.5 to 150 Finely stranded - 2 X 2.5 to 150
Tightening Torque	Nm	2.5	4	5	30
Type of Screw		M4	M6	M8	M12
Auxiliary Circuit					
No. of Contacts		1NO - Alarm			
		1NO - Start			
		1NC - Trip			
Rated Insulation Voltage	V	1000			
Rated Impulse Withstand	kV	8			
AC-15 rating at 415 V, 50 Hz	A	2			
Thermal Current	A	6			
Terminal Capacity		2 x 2.5 sq. mm, Solid or finely stranded.			
Tightening torque		1.5 Nm			
Type of screw		M3, Class 6.8			

Ordering Information

RTO Thermal Overload Relays

Type	Range (A)	Cat. Nos.
RTO-1	0.23 - 0.41	CS96355OOFO
	0.31 - 0.55	CS96355OOGO
	0.55 - 0.85	CS96355OOJO
	0.78 - 1.2	CS96355OOLO
	1.2 - 2.0	CS96355OONO
	1.9 - 2.8	CS96355OOPO
	2.4 - 3.6	CS96355OOQO
	3.5 - 5.2	CS96355OOSO
	4.6 - 6.7	CS96355OOTO
	6.7 - 9.7	CS96355OOVO
	8.5 - 12.5	CS96355OOAO
	12.5 - 18.5	CS96356OOCO
	17 - 25.5	CS96356OODO
	25 - 37	CS96356OOEO
	35 - 45	CS96356OOGO
RTO-2	5 - 7.5	CS96366OOUO
	7 - 11	CS96366OOVO
	10.5 - 16	CS96366OOBO
	15 - 21	CS96366OOCO
	20 - 31	CS96366OOEO
	30 - 43	CS96366OOFO
	40 - 57	CS96366OOSO
	50 - 75	CS96367OOJO
RTO-3	23 - 30	CS90873OOEO
	29 - 38	CS96303OOQO
	37 - 49	CS96304OOGO
	47 - 62	CS96312OOTO
	60 - 78	CS96313OOJO
	75 - 110	CS96314OOKO
RTO-4	23.4 - 36	CS97096OOGO
	36 - 60	CS97096OOJO
	57 - 84	CS97096OOKO
	72 - 108	CS97096OOLO
	105 - 156	CS97096OOMO
	138 - 201	CS97096OONO
	201 - 291	CS97096OOQO
	255 - 375	CS97096OORO

Accessories for RTO Relays

Separate Mounting Kit



Suitable for	Cat. No.
RTO-1 Relay	CS963350OOO
RTO-2 Relay	CS963060OOO
RTO-3 Relay	CS963070OOO

Reset cord

Suitable for	Cat. No.
RTO-1 Relay	CS963350OOO
RTO-2 Relay	CS963060OOO
RTO-3 Relay	CS963070OOO



I-T Characteristics

RTO1

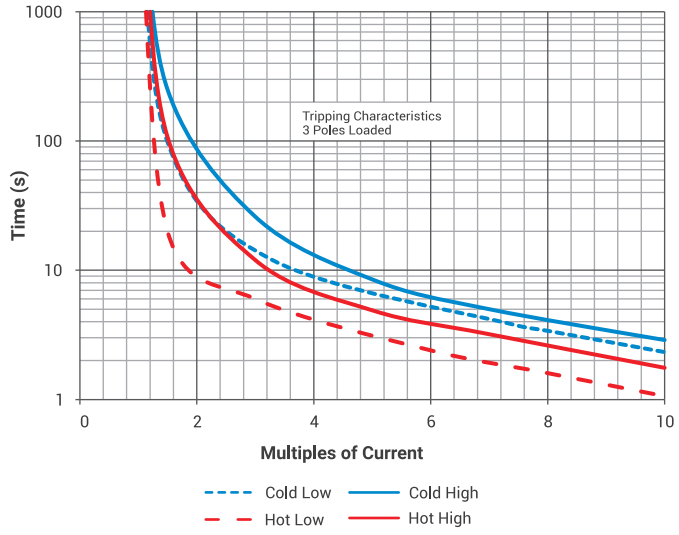

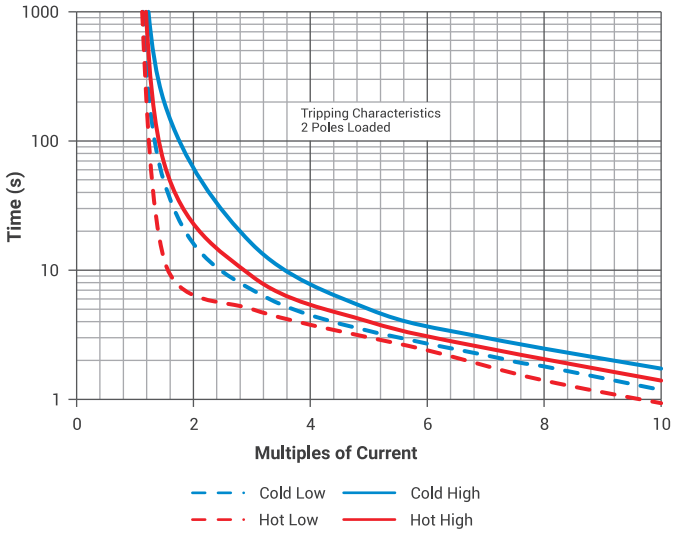

RTO2

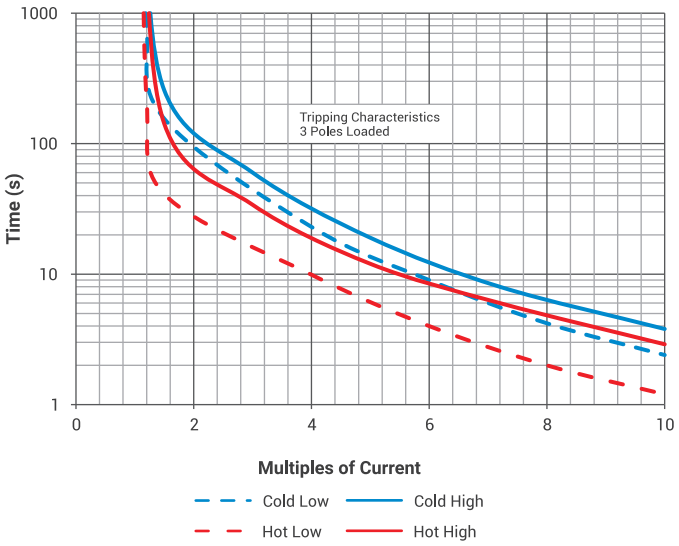

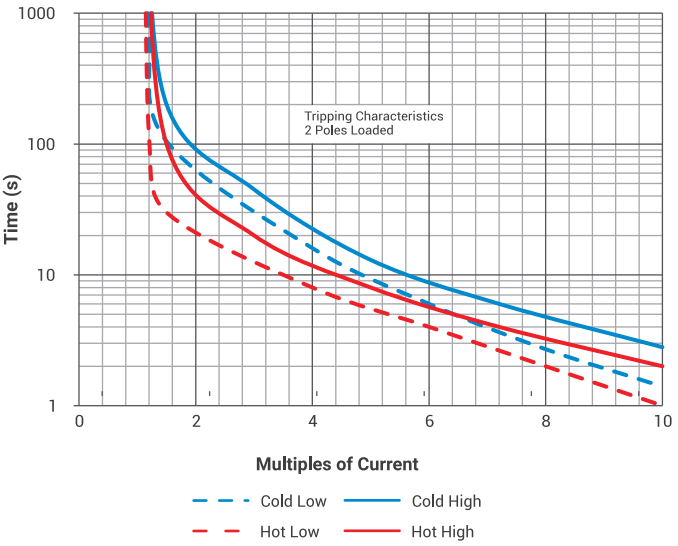

I-T Characteristics

RTO3

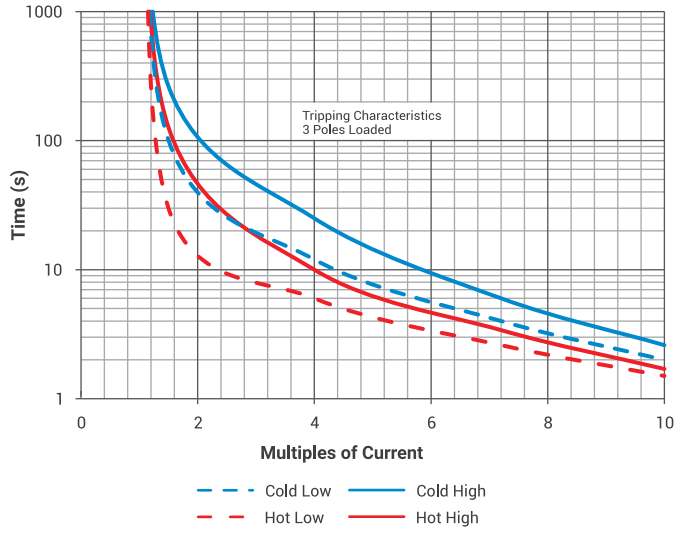

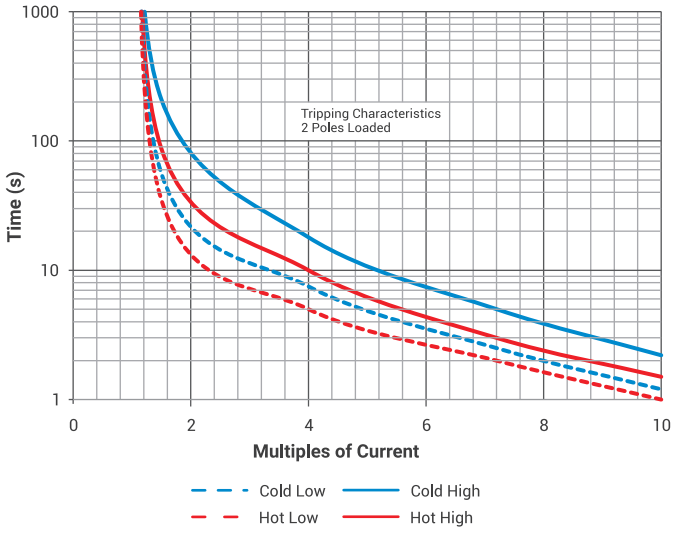

RTO4

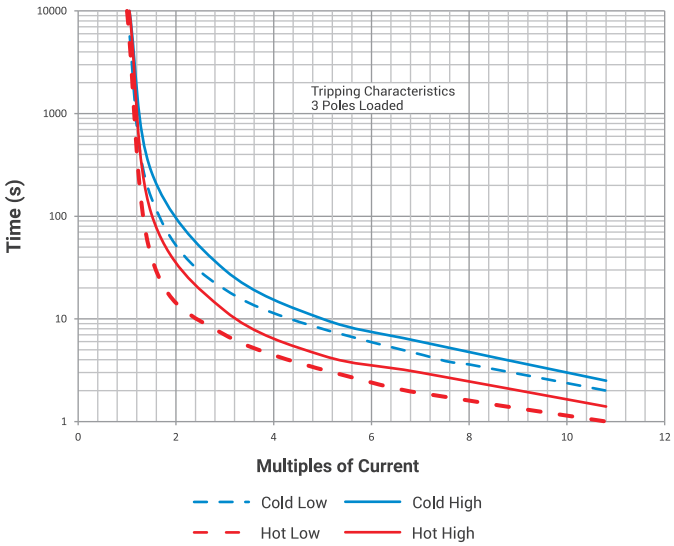

Over all Dimensions

RTO-1 Relay On
MO Frame 0 Contactor (9/12/18A)

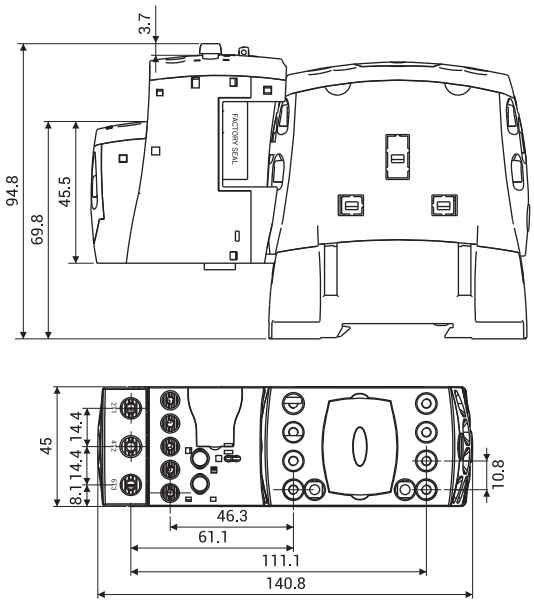

RTO-1 Relay On
MO Frame 1 Contactor (25/32/40/45A)

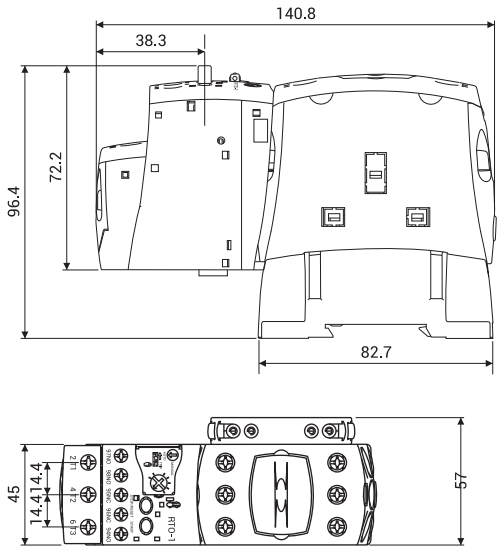

RTO-1 with Separate Mounting Kit RSO-1

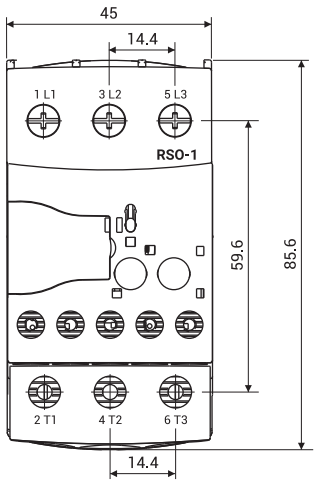

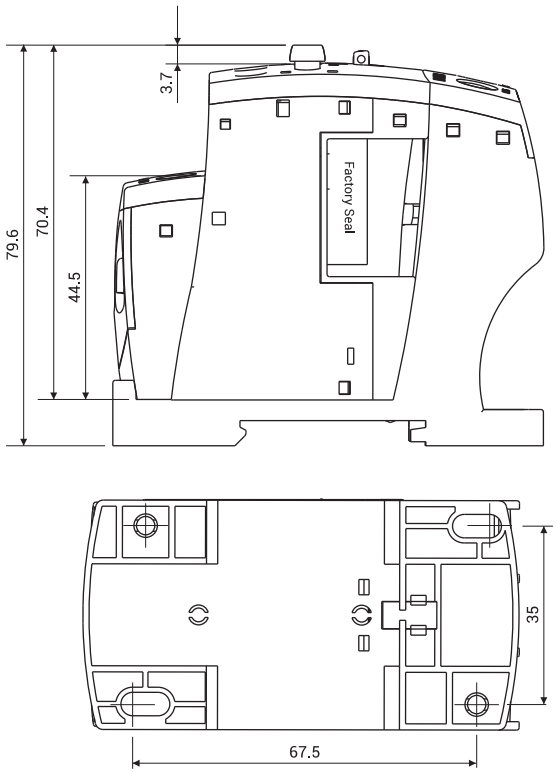

All dimensions in mm.

Over all Dimensions

RTO-2 Relay On
MO Frame 2 Contactor (50/60/70A)

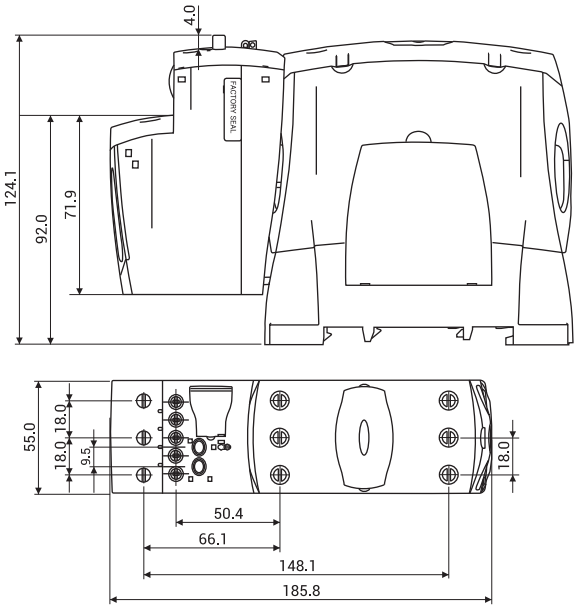

RTO-2 with Separate Mounting Kit RSO-2

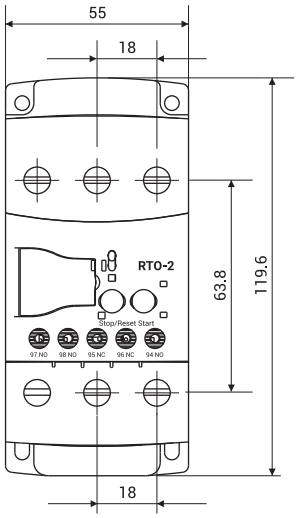

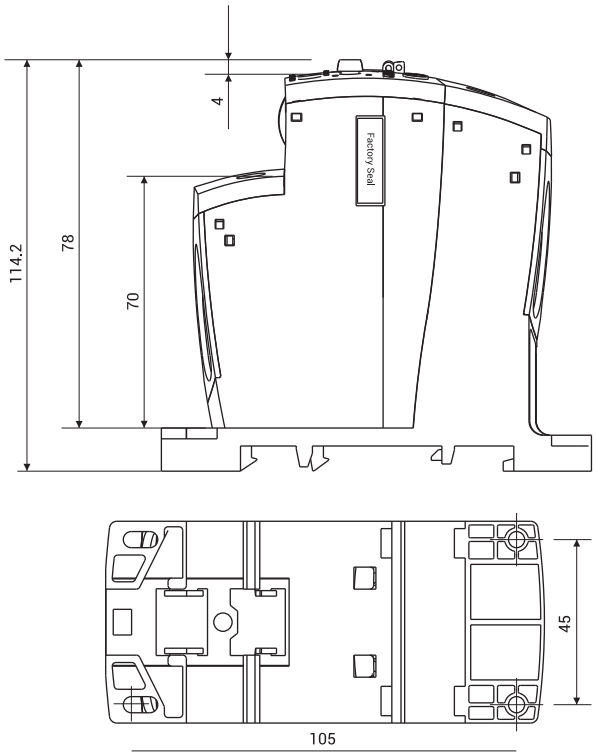

All dimensions in mm.

Over all Dimensions

RTO-3 Relay On
MO Frame 3 Contactor (80/85/110A)

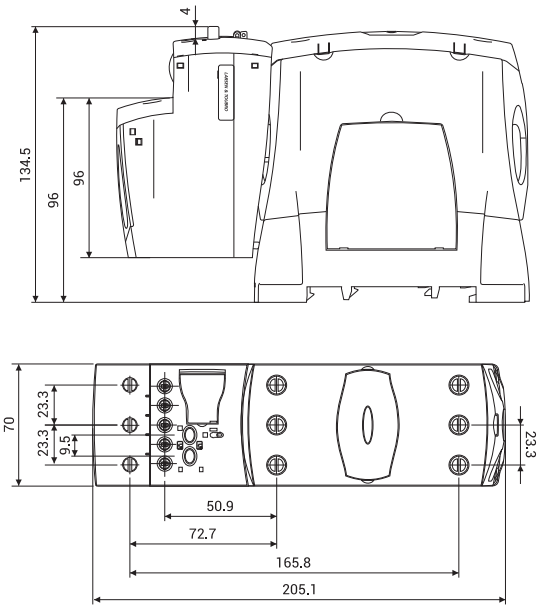

RTO-3 with Separate Mounting Kit RSO-3

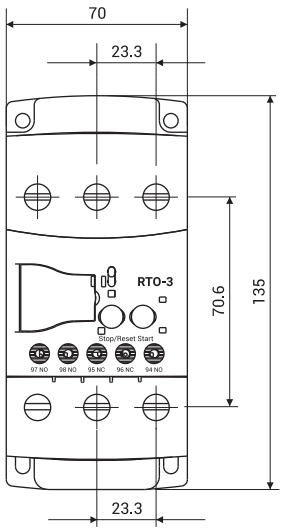

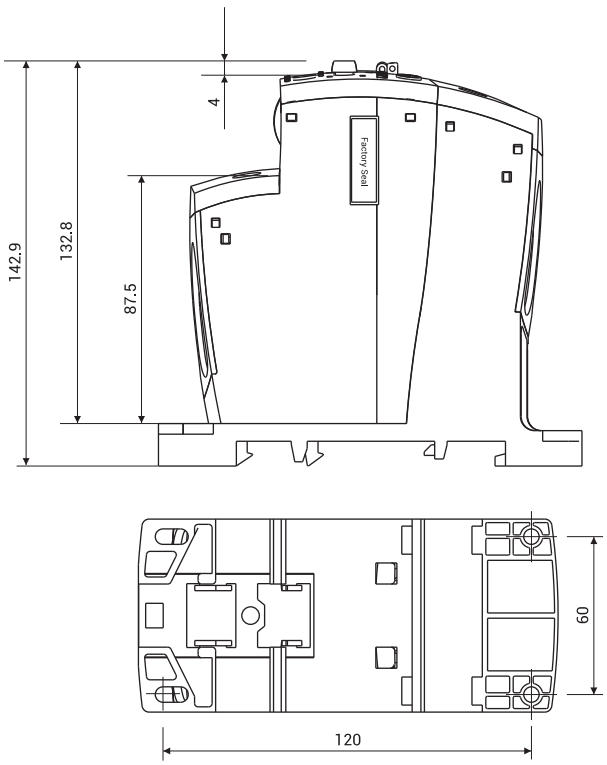

All dimensions in mm.

Over all Dimensions

RTO-4 Relay On
MO Frame 4/5 Contactor (140/180/225/250/300A)

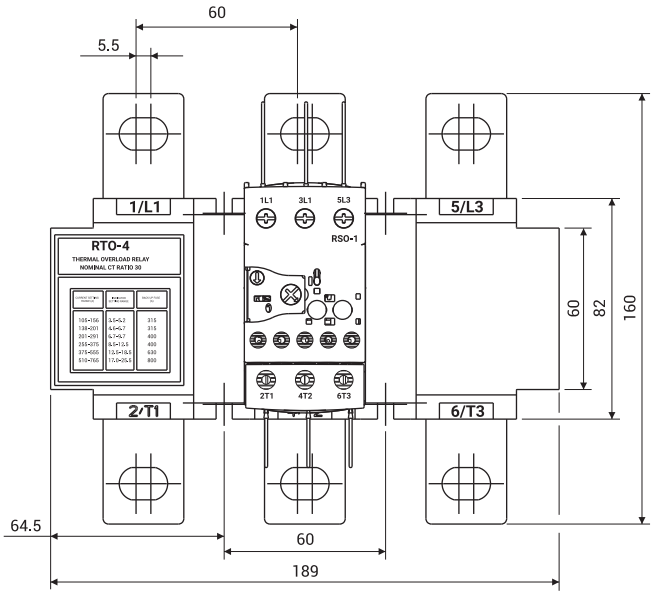

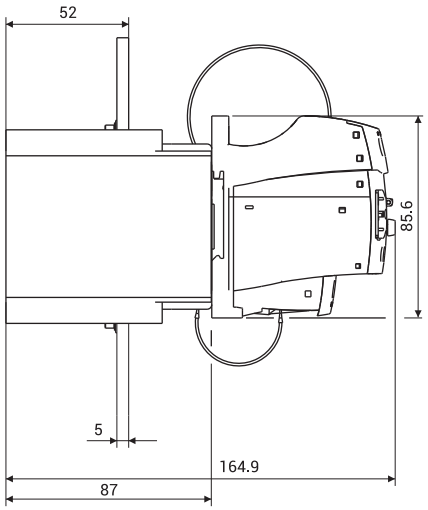

All dimensions in mm.





MNX 2 & 3 Pole Power Contactors

MNX power contactors are mainly used in motor feeder and control system applications. The range, available from 9A to 650A (AC-3) provides a reliable performance across diverse conditions like high ambient temperature, humidity etc. Standardized accessories and spares are available for the entire range.

REACH OUT TO RELIABILITY



Technical Details - 2&3 Pole Contactors

- Range from 9-650A Ac3
- Coil on top design 95A and above
- Built-in 2 NO + 2 NC auxiliary contacts for 95A & above






		Units	MNX 9	MNX 12	MNX 18	MNX 22
Catalogue No.	2 Pole		CS 90232	CS 90234	CS 90236	CS 90238
	3 Pole		CS 94106 / 7*	CS 94108 / 9*	CS 94100 / 1*	CS 94980 / 81*
Conformance to standards						
Power Contacts						
Rated insulation voltage, U_i		V	690	690	690	690
Rated impulse withstand voltage, U_{imp}		kV	8	8	8	8
Rated kW	240 V AC	kW	2.2	3.0	4.0	5.5
	415 V AC	kW	4.0	5.5	9.3	11.0
	500 V AC	kW	5.5	7.5	9.3	11.0
Rated making capacity	240 V AC	A	450	450	450	450
	415 - 500 V AC	A	450	450	450	450
Rated breaking capacity	240 V AC	A	200	250	250	250
	415 - 500 V AC	A	200	250	250	250
Rated operational current, I_e at 55 °C/ 60 °C Motor duty : 3Ø, 415 V, 50 Hz	Utilization category AC-1	A	25	30	30	32
	Utilization category AC-2	A	9	12	18	22
	Utilization category AC-3	A	9	12	18	22
	Utilization category AC-4	A	9	12	18	22
	Utilization category AC-4 (2,00,000 operations)	A	5.5	7.1	8	8.5
Permissible short time ratings	1 Seconds	A	250	300	300	300
	10 Seconds	A	105	145	145	176
	30 Seconds	A	70	90	90	102
	1 Minute	A	60	80	80	80
	10 Minute	A	30	40	40	40
	15 Minute	A	25	30	30	30
Mechanical life, No. of operating cycles		millions	15	15	15	15
Max. frequency of operations: Operating cycles/hr	Mechanical	cy/hr	7200	7200	7200	7200
	Utilization category AC-1	cy/hr	3000	3000	3000	3000
	Utilization category AC-2	cy/hr	750	750	750	750
	Utilization category AC-3	cy/hr	750	750	750	750
	Utilization category AC-4	cy/hr	300	300	300	300
Vibration resistance conforming to IEC 60068-2-6						
Ambient temperature around the device	Service temperature	^{0}C				
	Storage temperature	^{0}C				-40°C to +80°C
Altitude without deration		m				
Degree of Pollution						
Degree of protection						
Protective treatment as per IEC 60068 - 2 - 30						
Watt loss per pole	Utilization category AC-1	W	1.5	2	2	2.2
	Utilization category AC-3	W	0.5	0.2	0.8	0.8
Type of Terminal			Philip and Slot Head Combination Screw			








MNX 25	MNX 32	MNX 40	MNX 50	MNX 70	MNX 80
CS 90240	CS 90241	CS 90242	CS 94061	CS 94062	CS 94063
CS 94110	CS 94111	CS 94190	CS 97075	CS 97076	CS 97077
IS/IEC 60947-4-1, IEC 60947-4-1, EN 60947-4-1					
690	690	690	690	690	690
8	8	8	8	8	8
5.5	7.5	11.0	15.0	18.6	22.0
11.0	17.0	22.5	26.0	37.0	40.0
15.0	18.6	22.5	30.0	45.0	55.0
480	550	550	900	900	900
480	550	550	900	900	900
400	500	500	750	750	750
400	500	500	750	750	750
45	55	55	85	100	100
25	32	32	50	70	80
25	32	40	50	70	80
25	32	40	50	63	70
13.5	16	20	24	28.5	43
400	600	600	1000	1000	1000
240	400	400	650	650	650
120	225	225	370	370	370
110	150	150	250	250	262
50	70	70	120	120	120
45	65	65	110	110	110
10	10	10	10	10	10
7200	7200	3600	3600	3600	3600
3000	3000	3000	3000	3000	3000
750	750	750	750	750	750
750	750	750	750	750	750
300	300	300	300	300	300
	5..... 300 Hz : 3g				
	-20°C to +55°C				
				-15°C to +80°C	
	3000				
	3				
	IP 20				
	TH				
3.7	5.1	5.1	9.7	12.9	12.9
1.15	2.15	2.7	5	6.6	7
		Slot Head Screw			

MNX 2&3 Pole Power Contactors

Technical Details - 2&3 Pole Contactors

- Range from 9-650A Ac3
- Coil on top design 95A and above
- Built-in 2 NO + 2 NC auxiliary contacts for 95A & above






		Units	MNX 9	MNX 12	MNX 18	MNX 22
Catalogue No.	2 Pole		CS 90232	CS 90234	CS 90236	CS 90238
	3 Pole		CS 94106 / 7*	CS 94108 / 9*	CS 94100 / 1*	CS 94980 / 81*
Conformance to standards						
Maximum Main terminal capacity	Cable with Lug	mm^2	6	6	6	6
	Cable with Lug (spreader links)	mm^2	-	-	-	-
	Solid conductors	mm^2	2 x 4	2 x 4	2 x 4	2 x 4
	Multi strand conductors	mm^2	2 x 2.5	2 x 2.5	2 x 2.5	2 x 2.5
Tightening Torque	Main Pole Terminal	Nm	M3.5 / 1.1	M3.5 / 1.1	M3.5 / 1.1	M4 / 1.3
	Aux.Pole/Coil/Add on block Terminal	Nm	M3.5 / 1.1	M3.5 / 1.1	M3.5 / 1.1	M3.5 / 1.1
Fuse protection against short circuit			HF 20	HF 32	HF 32	HF 40
Auxiliary Contacts						
No. of additional aux. contact possible			8	8	8	8
No. of built-in auxiliary contacts			1 NO or 1 NC	1 NO or 1 NC	1 NO or 1 NC	1 NO or 1 NC
Conventional thermal current, I_{th} at 55°C		A	10	10	10	10
Endurance of auxiliary Contacts		millions	0.5	0.5	0.5	0.5
AC-15 rating , 50 Hz	24-110 V	A	6	6	6	6
	220-240 V	A	4	4	4	4
	360-440 V	A	4	4	4	4
	525-600 V	A	1.2	1.2	1.2	1.2
DC-13 rating	24 V	A	6	6	6	6
	110-125 V	A	1.1	1.1	1.1	1.1
	250 V	A	0.55	0.55	0.55	0.55
	480 V	A	0.31	0.31	0.31	0.31
	500 V	A	0.27	0.27	0.27	0.27
	600 V	A	0.2	0.2	0.2	0.2
Terminal capacity (Solid or multi strand conductors)		mm^2	2 x 2.5	2 x 2.5	2 x 2.5	2 x 2.5
Coil						
Voltage available Uc	50 / 60 Hz	V	24, 42, 110, 220, 240, 415, 525	24, 42, 110, 220, 240, 415, 525	24, 42, 110, 220, 240, 415, 525	24, 42, 110, 220, 240, 415, 525
Pick-up	VA	VA	68	68	68	68
Hold-on	VA	VA	11	11	11	11
	Watts	W	4	4	4	4
Limits of operation	Pick-up (%Uc) 50Hz	%Uc	65 - 120	65 - 120	65 - 120	65 - 120
	Pick-up (%Uc) 60Hz	%Uc	85 - 110	85 - 110	85 - 110	85 - 110
	Drop-off (%Uc)	%Uc	35 - 50	35 - 50	35 - 50	35 - 50
Operating time	Closing time	ms	10 - 12	10 - 12	10 - 12	10 - 12
	Opening time	ms	7 - 18	7 - 18	7 - 18	7 - 18
Safe isolation between coil and auxiliary contacts		V	400	400	400	400
Overall dimensions **H x W x D**		mm^3	83 x 45 x 88	83 x 45 x 88	83 x 45 x 88	83 x 45 x 88
Mounting clearance (front)		mm	10	10	10	10
Weight		kg	0.36	0.36	0.36	0.36

Technical Details - 2&3 Pole Contactors








MNX 25	MNX 32	MNX 40	MNX 50	MNX 70	MNX 80
CS 90240	CS 90241	CS 90242	CS 94061	CS 94062	CS 94063
CS 94110	CS 94111	CS 94190	CS 97075	CS 97076	CS 97077
IS/IEC 60947-4-1, IEC 60947-4-1, EN 60947-4-1					
10	10	10	1 x 35	1 x 35	1 x 35
-	-	-	1 x 12.5 x 3	1 x 12.5 x 3	1 x 12.5 x 3
2 x 6	2 x 6	2 x 6	-	-	-
2 x 4	2 x 4	2 x 4	-	-	-
M4 / 1.3	M4 / 1.3	M4 / 1.3	M5 / 2.4	M6 / 4.5	M6 / 4.5
M3.5 / 1.1	M3.5 / 1.1	M3.5 / 1.1	M3.5 / 1.1	M3.5 / 1.1	M3.5 / 1.1
HF 63	HN,000 63	HN,000 80	HN,000 80	HN,000 100	HN,000 125
8	8	8	8	8	8
#	#	#	#	#	#
10	10	10	10	10	10
0.5	0.5	0.5	0.5	0.5	0.5
6	6	6	6	6	6
4	4	4	4	4	4
4	4	4	4	4	4
1.2	1.2	1.2	1.2	1.2	1.2
6	6	6	6	6	6
1.1	1.1	1.1	1.1	1.1	1.1
0.55	0.55	0.55	0.55	0.55	0.55
0.31	0.31	0.31	0.31	0.31	0.31
0.27	0.27	0.27	0.27	0.27	0.27
0.2	0.2	0.2	0.2	0.2	0.2
2 x 2.5	2 x 2.5	2 x 2.5	2 x 2.5	2 x 2.5	2 x 2.5
24, 42, 110, 220, 240, 415, 525	24, 42, 110, 220, 240, 415, 525	24, 42, 110, 220, 240, 415, 525	24/29, 42/50, 110/132, 220/264, 240/288, 415/500, 525/630	24/29, 42/50, 110/132, 220/264, 240/288, 415/500, 525/630	24/29, 42/50, 110/132, 220/264, 240/288, 415/500, 525/630
68	68	68	190	190	190
11	11	11	21	21	21
4	4	4	7.5	7.5	7.5
65 - 120	65 - 120	80 - 110	80 - 110	80 - 110	80 - 110
85 - 110	85 - 110	85 - 110	85 - 110	85 - 110	85 - 110
35 - 50	35 - 50	35 - 65	35 - 65	35 - 65	35 - 65
10 - 12	10 - 12	10 - 12	15 - 35	15 - 35	15 - 35
7 - 18	7 - 18	7 - 18	10 - 25	10 - 25	10 - 25
400	400	400	400	400	400
83 x 45 x 95.7	83 x 45 x 95.7	83 x 45 x 95.7	109 x 89 x 120.5	109 x 89 x 120.5	109 x 89 x 120.5
10	10	10	10	10	10
0.4	0.4	0.4	1.1	1.1	1.1

Technical Details - 2&3 Pole Contactors

- Range from 9-650A Ac3
- Coil on top design 95A and above
- Built-in 2 NO + 2 NC auxiliary contacts for 95A & above






		Units	MNX 9	MNX 12	MNX 18	MNX 22
Catalogue No.	2 Pole		CS 90232	CS 90234	CS 90236	CS 90238
	3 Pole		CS 94106 / 7*	CS 94108 / 9*	CS 94100 / 1*	CS 94980 / 81*
Conformance to standards						
DC ratings with 3 poles in series and AC coil operation	DC 1 (110V)	A	9	12	18	22
	DC 1 (220V)	A	9	12	18	22
	DC 3 (110V)	A	9	12	18	22
	DC 3 (220V)	A	9	12	18	22
	DC 5 (110V)	A	9	12	18	22
	DC 5 (220V)	A	6	7.5	9	12

Technical Details - 2&3 Pole Contactors








MNX 25	MNX 32	MNX 40	MNX 50	MNX 70	MNX 80
CS 90240	CS 90241	CS 90242	CS 94061	CS 94062	CS 94063
CS 94110	CS 94111	CS 94190	CS 97075	CS 97076	CS 97077
IS/IEC 60947-4-1, IEC 60947-4-1, EN 60947-4-1					
25	32	40	50	63	80
25	32	40	50	63	80
25	32	40	50	63	80
25	32	40	50	63	80
25	32	40	50	63	80
20	25	50	50	50	63

Technical Details - 2&3 Pole Contactors

- Range from 9-650A Ac3
- Coil on top design 95A and above
- Built-in 2 NO + 2 NC auxiliary contacts for 95A & above






		Units	MNX 95	MNX 110	MNX 140	MNX 185
Catalogue No.	2 Pole		CS 94064	CS 94065	CS 94066	CS 94978
	3 Pole		CS 94136	CS 94137	CS 94138	CS 94139
Conformance to standards						
Power Contacts						
Rated insulation voltage, U_i		V	1000	1000	1000	1000
Rated impulse withstand voltage, U_{imp}		kV	8	8	8	8
Rated kW	240 V AC	kW	25.0	30.0	40.0	55.0
	415 V AC	kW	45.0	55.0	75.0	90.0
	500 V AC	kW	55.0	75.0	90.0	110.0
Rated making capacity	240 V AC	A	1680	1680	1800	2220
	415 - 500 V AC	A	1680	1680	1800	2220
Rated breaking capacity	240 V AC	A	1400	1400	1600	1850
	415 - 500 V AC	A	1400	1400	1600	1850
Rated operational current, I_e at 55°C / 60°C Motor duty : 3Ø, 415 V, 50 Hz	Utilization category AC-1	A	160	160	160	250
	Utilization category AC-2	A	95	110	140	185
	Utilization category AC-3	A	95	110	140	185
	Utilization category AC-4	A	95	110	140	160
	Utilization category AC-4 (2,00,000 operations)	A	53	58	66	90
AC-8b rating at 415V, 50 Hz		A	123.5	143	182	240.5
Permissible short time ratings	1 Seconds	A	1320	1320	1320	2000
	10 Seconds	A	800	880	1120	1500
	30 Seconds	A	500	509	647	1000
	1 Minute	A	400	400	458	800
	10 Minute	A	170	170	170	350
	15 Minute	A	160	160	160	320
Mechanical life, No. of operating cycles		millions	10	10	10	10
Max. frequency of operations: Operating cycles/hr	Mechanical	cy/hr	3600	3600	3600	3600
	Utilization category AC-1	cy/hr	3000	3000	3000	3000
	Utilization category AC-2	cy/hr	750	750	750	750
	Utilization category AC-3	cy/hr	750	750	750	750
	Utilization category AC-4	cy/hr	300	300	300	250
Vibration resistance conforming to IEC 60068-2-6						
Ambient temperature around the device	Service temperature	°C				
	Storage temperature	°C				
Altitude without deration		m				
Degree of Pollution						
Degree of protection						
Protective treatment as per IEC 60068 - 2 - 30						
Watt loss per pole	Utilization category AC-1	W	13.5	13.5	17.6	16.6
	Utilization category AC-3	W	5	7	11.7	9.4
Type of Terminal						

Accessories features








MNX 225	MNX 250	MNX 300	MNX 400	MNX 550	MNX 650
CS94979	CS 90301	CS 94346	CS 94069	CS 90243	CS 90578
CS 94140	CS94141	CS90280	CS 94144	CS 94145	CS 96327
IS/IEC 60947-4-1, IEC 60947-4-1, EN 60947-4-1					
1000	1000	1000	1000	1000	1000
8	8	8	8	8	8
63.0	63.0	90.0	110.0	160.0	180.0
110.0	132.0	160.0	200.0	315.0	355.0
132.0	142.0	180.0	250.0	365.0	-
2400	3000	4500	4500	5500	6500
2400	3000	4500	4500	5500	6500
2000	2500	4000	4000	4500	5200
2000	2500	4000	4000	4500	5200
300	300	400	425	650	800
225	250	300	400	550	650
225	250	300	400	550	650
200	200	235	275	300	400
100	120	140	150	150	-
292.5	325	390	520	715	845
2500	2500	3500	4600	7000	7000
1800	2000	2400	4400	6400	6400
1200	1200	1500	3100	4500	4500
1000	1000	1100	2500	3500	3500
450	450	550	900	1400	1400
400	400	500	840	1300	1300
10	10	10	10	10	10
3600	3600	3600	3600	1200	1200
3000	3000	3000	3000	750	750
750	750	750	750	750	750
750	750	750	750	750	750
150	150	150	150	150	150
	5...300Hz : 3g				
	-20°C to +55°C				
	-15°C to 80°C				
	3000				
	3				
	IP 20				
	TH				
19.4	20.8	17.6	40	52.7	61.2
15	15	12.7	20.7	45	48.6
Slot Head Screw					

Technical Details - 2&3 Pole Contactors

- Range from 9-650A Ac3
- Coil on top design 95A and above
- Built-in 2 NO + 2 NC auxiliary contacts for 95A & above






		Units	MNX 95	MNX 110	MNX 140	MNX 185
Catalogue No.	2 Pole		CS 94064	CS 94065	CS 94066	CS 94978
	3 Pole		CS 94136	CS 94137	CS 94138	CS 94139
Conformance to standards						
Maximum Main terminal capacity	Cable with Lug	mm^2	1 x 120	1 x 120	1 x 120	1 x 185
	2 Cable with Lug (spreader links)	mm^2	2 x 25 x 3	2 x 25 x 3	2 x 25 x 3	2 x 30 x 5
	2 Solid conductors	mm	-	-	-	-
	2 Multi strand conductors	mm	-	-	-	-
Tightening Torque	Main Pole Terminal	Nm	M8 / 11	M8 / 11	M8 / 11	M10 / 14
	Aux.Pole/Coil/Add on block Terminal	Nm	M3.5 / 1.1	M3.5 / 1.1	M3.5 / 1.1	M3.5 / 1.1
Fuse protection against short circuit			HN,0 200	HN,0 200	HN,1 250	HN,2 250
Auxiliary Contacts						
No. of additional aux. contact possible			4	4	4	4
No. of built-in auxiliary contacts			2 NO + 2 NC	2 NO + 2 NC	2 NO + 2 NC	2 NO + 2 NC
Conventional thermal current, I_{th} at 55°C		A	10	10	10	10
Endurance of auxiliary Contacts		millions	0.5	0.5	0.5	0.5
AC-15 rating, 50 Hz	24 - 110 V	A	6	6	6	6
	220 - 240 V	A	4	4	4	4
	360 - 440 V	A	4	4	4	4
	525 - 600 V	A	1.2	1.2	1.2	1.2
DC-13 rating	24 V	A	6	6	6	6
	110-125 V	A	1.1	1.1	1.1	1.1
	250 V	A	0.55	0.55	0.55	0.55
	480 V	A	0.31	0.31	0.31	0.31
	500 V	A	0.27	0.27	0.27	0.27
	600 V	A	0.2	0.2	0.2	0.2
Terminal capacity (Solid or multi strand conductors)		mm^2	2 x 2.5	2 x 2.5	2 x 2.5	2 x 2.5
Coil						
Voltage available Uc	50 / 60 Hz	V	24/29, 42/50, 110/132, 220/264, 240/288, 415/500, 525/630	24/29, 42/50, 110/132, 220/264, 240/288, 415/500, 525/630	24/29, 42/50, 110/132, 220/264, 240/288, 415/500, 525/630	110/132, 220/264, 240/288, 415/500, 525/630
Pick-up	VA	VA	550	550	550	960
Hold-on	VA	VA	36	36	36	56
	Watts	W	10	10	10	16
Limits of operation	Pick-up (%Uc) 50Hz	%Uc	80 - 110	80 - 110	80 - 110	80 - 110
	Pick-up (%Uc) 60Hz	%Uc	85 - 110	85 - 110	85 - 110	85 - 110
	Drop-off (%Uc)	%Uc	35 - 65	35 - 65	35 - 65	35 - 65
Operating time	Closing time	ms	20 - 40	20 - 40	20 - 40	20 - 45
	Opening time	ms	10 - 25	10 - 25	10 - 25	10 - 25
Safe isolation between coil and auxiliary contacts		V	690	690	690	690
Overall dimensions **H x W x D**		mm^3	175 x 137 x 152	175 x 137 x 152	175 x 137 x 152	208.2 x 147 x 181
Mounting clearance (front)		mm	10	10	10	10
Weight		kg	3	3	3	5.2

Accessories features








MNX 225	MNX 250	MNX 300	MNX 400	MNX 550	MNX 650
CS94979	CS 90301	CS 94346	CS 94069	CS 90243	CS 90578
CS 94140	CS94141	CS90280	CS 94144	CS 94145	CS 96327
IS/IEC 60947-4-1, IEC 60947-4-1, EN 60947-4-1					
1 x 185	1 x 185	2 x 240 / 1 x 300	2 x 240 / 1 x 300	2 x 50 x 5	-
2 x 30 x 5	2 x 30 x 5	2 x 50 x 5	2 x 50 x 5	2 x 50 x 5	2 x 60 x 5
-	-	-	-	-	-
-	-	-	-	-	-
M10 / 14	M10 / 14	M12 / 27	M12 / 27	M12 / 27	M12 / 27
M3.5 / 1.1	M3.5 / 1.1	M3.5 / 1.1	M3.5 / 1.1	M3.5 / 1.1	M3.5 / 1.1
HN,3 315	HN,3 315	HN,2 400	HN,3 500	HN,3 630	HN,3 800
4	4	4	4	4	4
2 NO + 2 NC	2 NO + 2 NC	2 NO + 2 NC	2 NO + 2 NC	2 NO + 2 NC	2 NO + 2 NC
10	10	10	10	10	10
0.5	0.5	0.5	0.5	0.5	0.5
6	6	6	6	6	6
4	4	4	4	4	4
4	4	4	4	4	4
1.2	1.2	1.2	1.2	1.2	1.2
6	6	6	6	6	6
1.1	1.1	1.1	1.1	1.1	1.1
0.55	0.55	0.55	0.55	0.55	0.55
0.31	0.31	0.31	0.31	0.31	0.31
0.27	0.27	0.27	0.27	0.27	0.27
0.2	0.2	0.2	0.2	0.2	0.2
2 x 2.5	2 x 2.5	2 x 2.5	2 x 2.5	2 x 2.5	2 x 2.5
110/132, 220/264, 240/288, 415/500, 525/630	110/132, 220/264, 240/288, 415/500, 525/630	110/132, 220/264, 240/288, 415/500, 525/630	110/132, 220/264, 240/288, 415/500, 525/630	110, 220, 240, 415	110, 220, 240, 415
960	960	2100	2100	1000	1000
56	56	95	95	25	25
16	16	35	35	10	10
80 - 110	80 - 110	80 - 110	80 - 110	80 - 110	80 - 110
85 - 110	85 - 110	85 - 110	85 - 110	85 - 110	85 - 110
35 - 65	35 - 65	35 - 65	35 - 65	35 - 65	35 - 65
20 - 45	20 - 45	20 - 45	20 - 45	40 -70	40 -70
10 - 25	10 - 25	10 - 25	10 - 25	30 - 60	30 - 60
690	690	690	690	690	690
208.2 x 147 x 181	208.2 x 147 x 181	275 x 200 x 220	275 x 200 x 220	275 x 200 x 220	296 x 200 x 220
10 mm	10 mm	10 mm	10 mm	10 mm	10 mm
5.2	5.2	9.7	9.7	10.4	10.4

Technical Details - 2&3 Pole Contactors

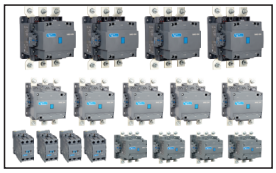

- Range from 9-650A Ac3
- Coil on top design 95A and above
- Built-in 2 NO + 2 NC auxiliary contacts for 95A & above






		Units	MNX 95	MNX 110	MNX 140	MNX 185
Catalogue No.	2 Pole		CS 94064	CS 94065	CS 94066	CS 94978
	3 Pole		CS 94136	CS 94137	CS 94138	CS 94139
Conformance to standards						
DC ratings with 3 poles in series and AC coil operation	DC 1 (110V)	A	95	110	140	185
	DC 1 (220V)	A	95	110	140	185
	DC 3 (110V)	A	95	110	140	185
	DC 3 (220V)	A	95	110	140	185
	DC 5 (110V)	A	95	110	140	185
	DC 5 (220V)	A	95	110	125	185

Accessories features








MNX 225	MNX 250	MNX 300	MNX 400	MNX 550	MNX 650
CS94979	CS 90301	CS 94346	CS 94069	CS 90243	CS 90578
CS 94140	CS94141	CS90280	CS 94144	CS 94145	CS 96327
IS/IEC 60947-4-1, IEC 60947-4-1, EN 60947-4-1					
225	225	300	400	550	650
225	225	265	400	550	650
225	225	300	400	550	650
225	225	265	400	550	650
225	225	300	400	550	650
225	225	265	400	550	650

Ordering Information

Accessories for MNX

Add-on Blocks



MNX / MCX
Top Add-on Block



MNX / MCX
Side Add-on Blocks

Mechanical Interlock Kits



MNX M1
(MNX 9-40)



MNX M7
(MNX 185-250)



MNX M8
(MNX 300-650)

Surge Suppressors



MNX S1



MNX S3



MNX S4



MNX Spare Coils

Spares for MNX



MNX Spare Kits

Accessories								
			MNX 9 - 40	MNX 50 - 80	MNX 95 - 140	MNX 185 - 250	MNX 300 - 400	MNX 550 - 650
	Mounting	Configuration	Cat. No.	Cat. No.	Cat. No.	Cat. No.	Cat. No.	Cat. No.
Add on Block$	Top	4 NO	CS94112	CS94112	-	-	-	-
		3 NO + 1 NC	CS94113	CS94113	-	-	-	-
		2 NO + 2 NC	CS94114	CS94114	-	-	-	-
		1 NO + 3 NC	CS94115	CS94115	-	-	-	-
		4 NC	CS94116	CS94116	-	-	-	-
		2 NO	CS94117	CS94117	-	-	-	-
		1 NO + 1 NC	CS94118	CS94118	-	-	-	-
		2 NC	CS94119	CS94119	-	-	-	-
		1 NO	CS94120	CS94120	-	-	-	-
		1 NC	CS94121	CS94121	-	-	-	-
	First Left	1 NO + 1 NC	CS94220	CS94201	CS94205	CS94205	CS94205	CS94205
	First Right	1 NO + 1 NC	CS94221	CS94202	CS94206	CS94206	CS94206	CS94206
	Second Left	1 NO + 1 NC	-	CS94203	CS94207	CS94207	CS94207	CS94207
	Second Right	1 NO + 1 NC	-	CS94204	CS94208	CS94208	CS94208	CS94208
Mechanical Interlock Kit$			CS94126	CS94197	CS94198	CS94199	CS94200	CS94200
Surge Suppressors*			CS94166	CS94163	CS94164	CS94164	CS94165	-

* Add 4 Digit Coil Suffix as per required voltage
$ Ordering suffix : OOOO

Spares		
Contactor	Spare Kits	Spare Coil *
MNX 9	CS94123	CS94105
MNX 12	CS94124	
MNX 18	CS94125	
MNX 22	CS94269	
MNX 25	CS94127	
MNX 32	CS94128	
MNX 40	CS94147	
MNX 50	CS94150	CS94192
MNX 70	CS94151	
MNX 80	CS94152	
MNX 95	CS94153	CS94196
MNX 110	CS94154	
MNX 140	CS94155	
MNX 185	CS94156	CS94194
MNX 225	CS94157	
MNX 250	CS90310	
MNX 300	CS90283	CS94195
MNX 400	CS94161	
MNX 550	CS94162	CS94193
MNX 650	CS96336	

Ordering Suffix for Coil Voltages

Std Coil voltage	24	42	48	110	220	240	320	360	380	415	525
Ordering Suffix - 50/60 Hz	GOOO	HOOO	JOOO	AOOO	KOOO	BOOO	ROOO	COOO	LOOO	DOOO	MOOO

Terminal Marking of Addon Block

Mounting	Add-ON Block	Contact Combination	MNX 9 - 40	
			Cat. No.	Terminal Markings
Top	MNX-A1	4 NO - 4 Pole	CS941120000	53-54, 63-64, 73-74, 83-84
		3 NO + 1 NC - 4 Pole	CS941130000	53-54, 61-62, 73-74, 83-84
		2 NO + 2 NC - 4 Pole	CS941140000	53-54, 61-62, 71-72, 83-84
		1 NO + 3 NC - 4 Pole	CS941150000	53-54, 61-62, 71-72, 81-82
		4 NC - 4 Pole	CS941160000	51-52, 61-62, 71-72, 81-82
	MNX-A2	2 NO - 2 Pole	CS941170000	53-54, 63-64
		1 NO + 1NC - 2 Pole	CS941180000	53-54, 61-62
		2 NC - 2 Pole	CS941190000	51-52, 61-62
		1 NO - 2 Pole	CS941200000	53-54
		1 NC - 2 Pole	CS941210000	61-62
Side	MNX-A12S/	1 NO + 1 NC (1st Left)	CS942200000	23-24, 31-32
		1 NO + 1 NC (1st Right)	CS942210000	

Mounting	Add-ON Block	Contact Combination	MNX 50 - 80	
			Cat. No.	Terminal Markings
Top	MNX-A1	4 NO - 4 Pole	CS941120000	53-54, 63-64, 73-74, 83-84
		3 NO + 1 NC - 4 Pole	CS941130000	53-54, 61-62, 73-74, 83-84
		2 NO + 2 NC - 4 Pole	CS941140000	53-54, 61-62, 71-72, 83-84
		1 NO + 3 NC - 4 Pole	CS941150000	53-54, 61-62, 71-72, 81-82
		4 NC - 4 Pole	CS941160000	51-52, 61-62, 71-72, 81-82
	MNX-A2	2 NO - 2 Pole	CS941170000	53-54, 63-64
		1 NO + 1 NC - 2 Pole	CS941180000	53-54, 61-62
		2 NC - 2 Pole	CS941190000	51-52, 61-62
		1 NO - 2 Pole	CS941200000	53-54
		1 NC - 2 Pole	CS941210000	61-62
Side	MNX-A4	1 NO + 1 NC (1st Left)	CS942010000	13-14, 21-22
		1 NO + 1 NC (1st Right)	CS942020000	43-44, 31-32
		1 NO + 1 NC (2nd Left)	CS942030000	53-54, 61-62
		1 NO + 1 NC (2nd Right)	CS942040000	73-74, 81-82

Electrical Life Curves

Utilisation Category AC-1

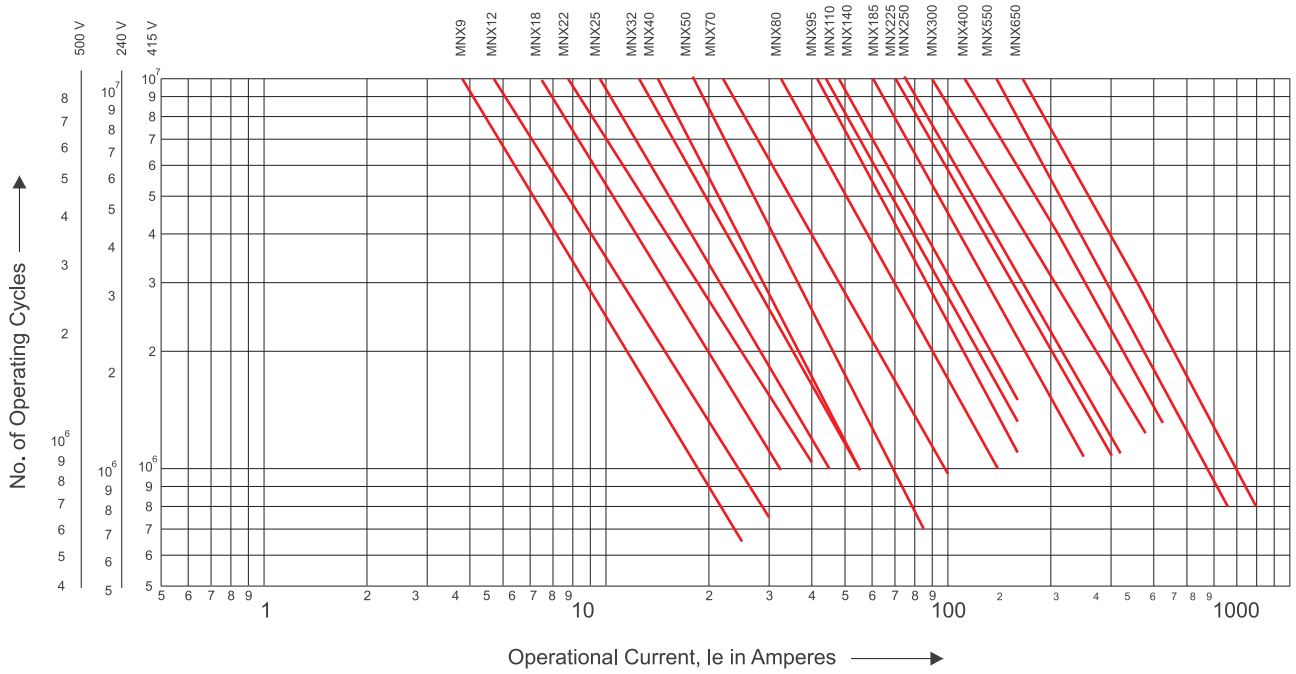

Utilisation Category AC-2

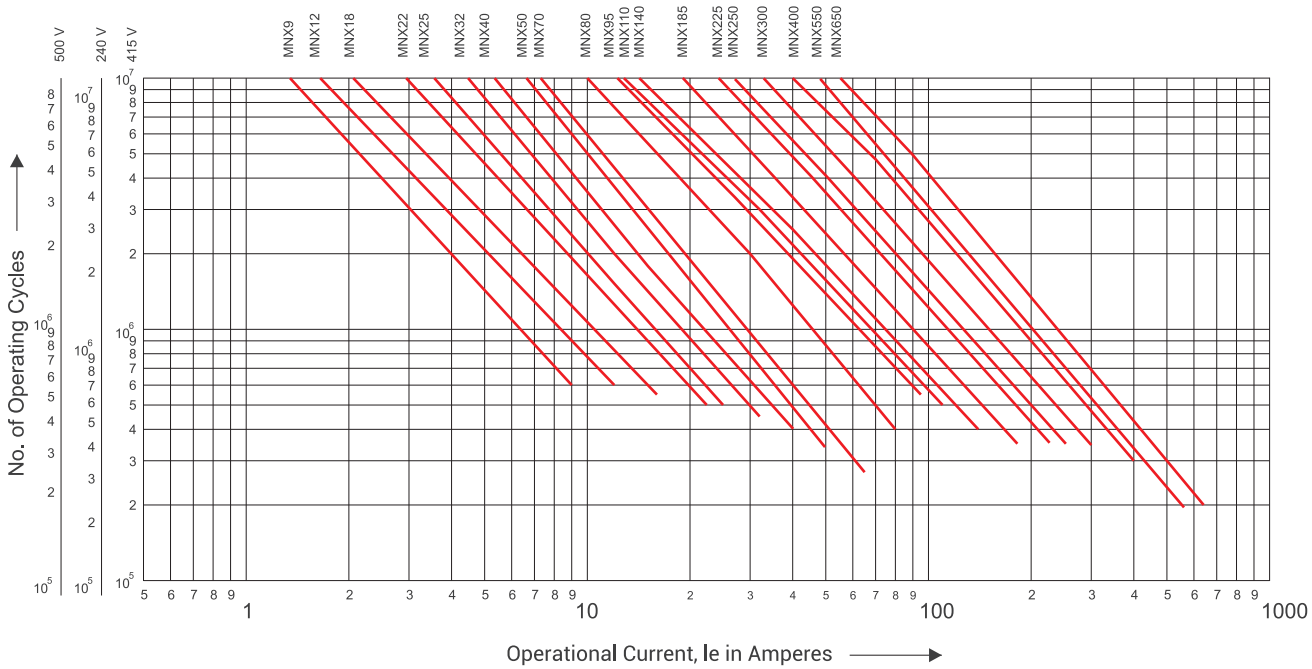

Electrical Life Curves

Utilisation Category AC-3

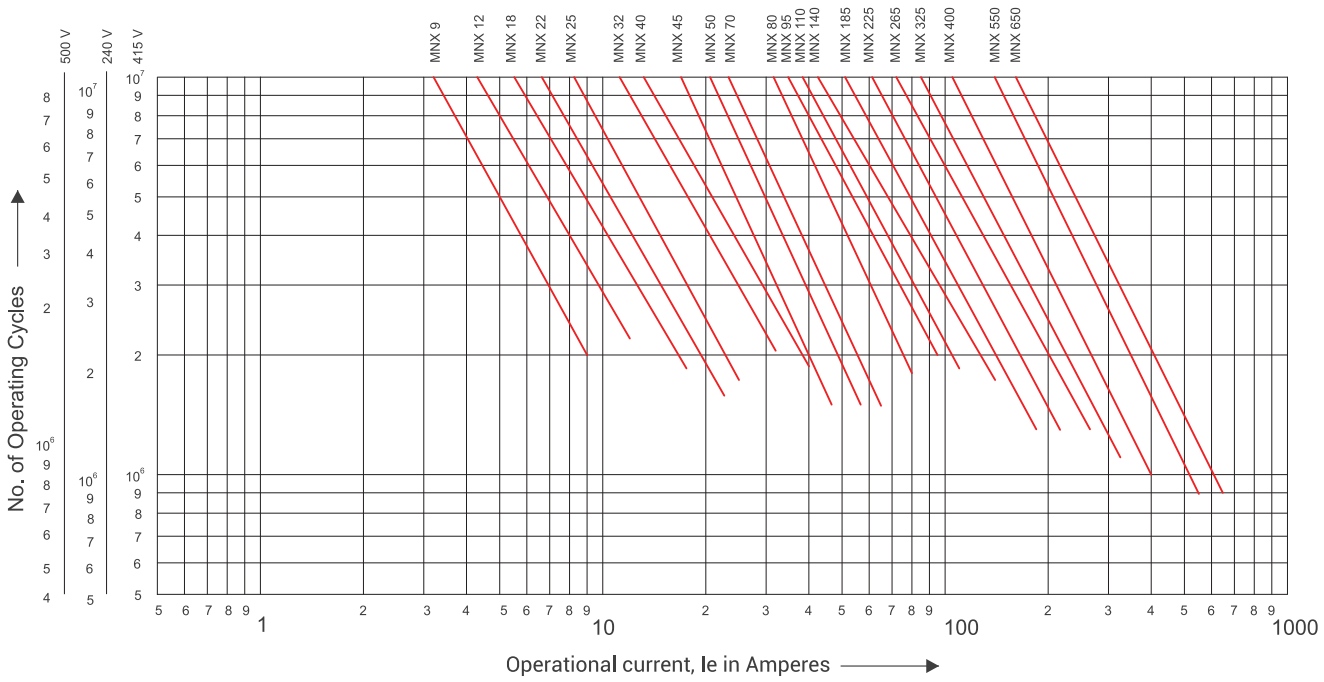

Utilisation Category AC-4

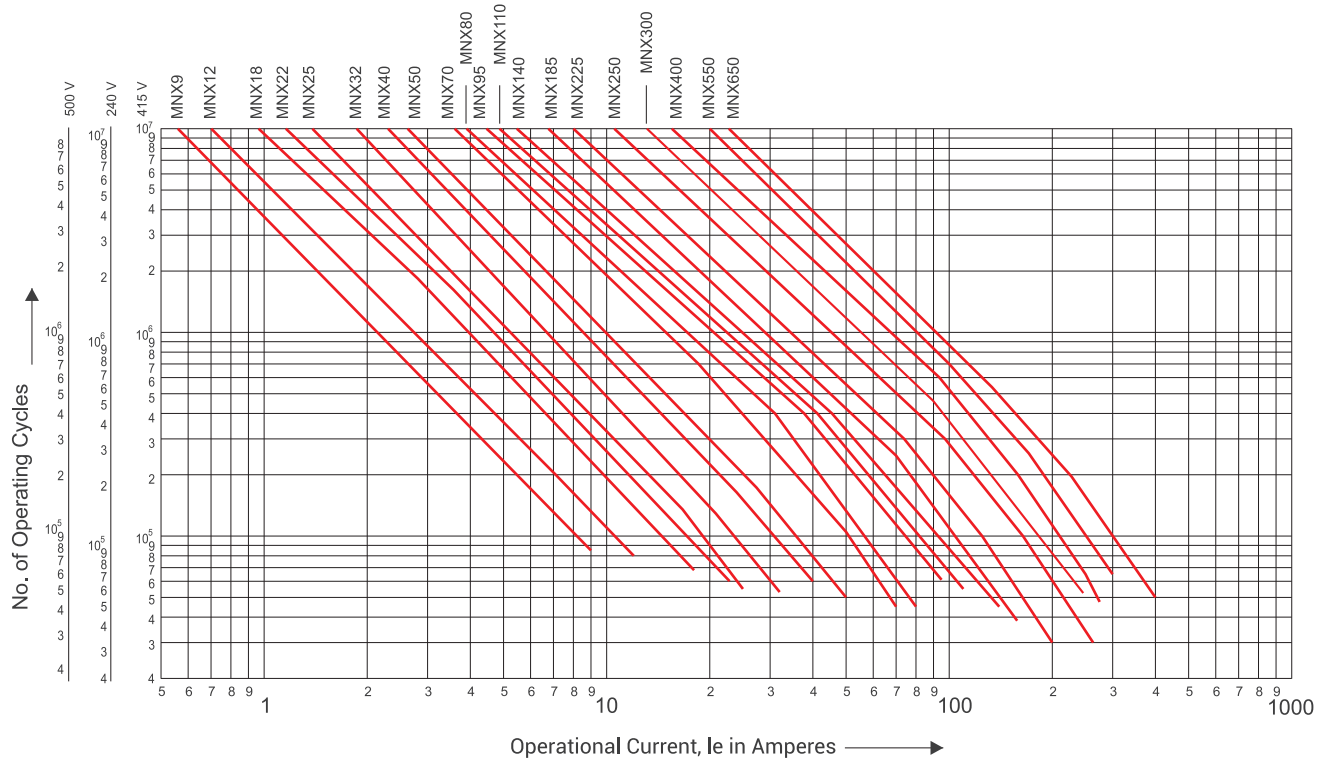

Electrical Life Curves

Contact Travel Diagram

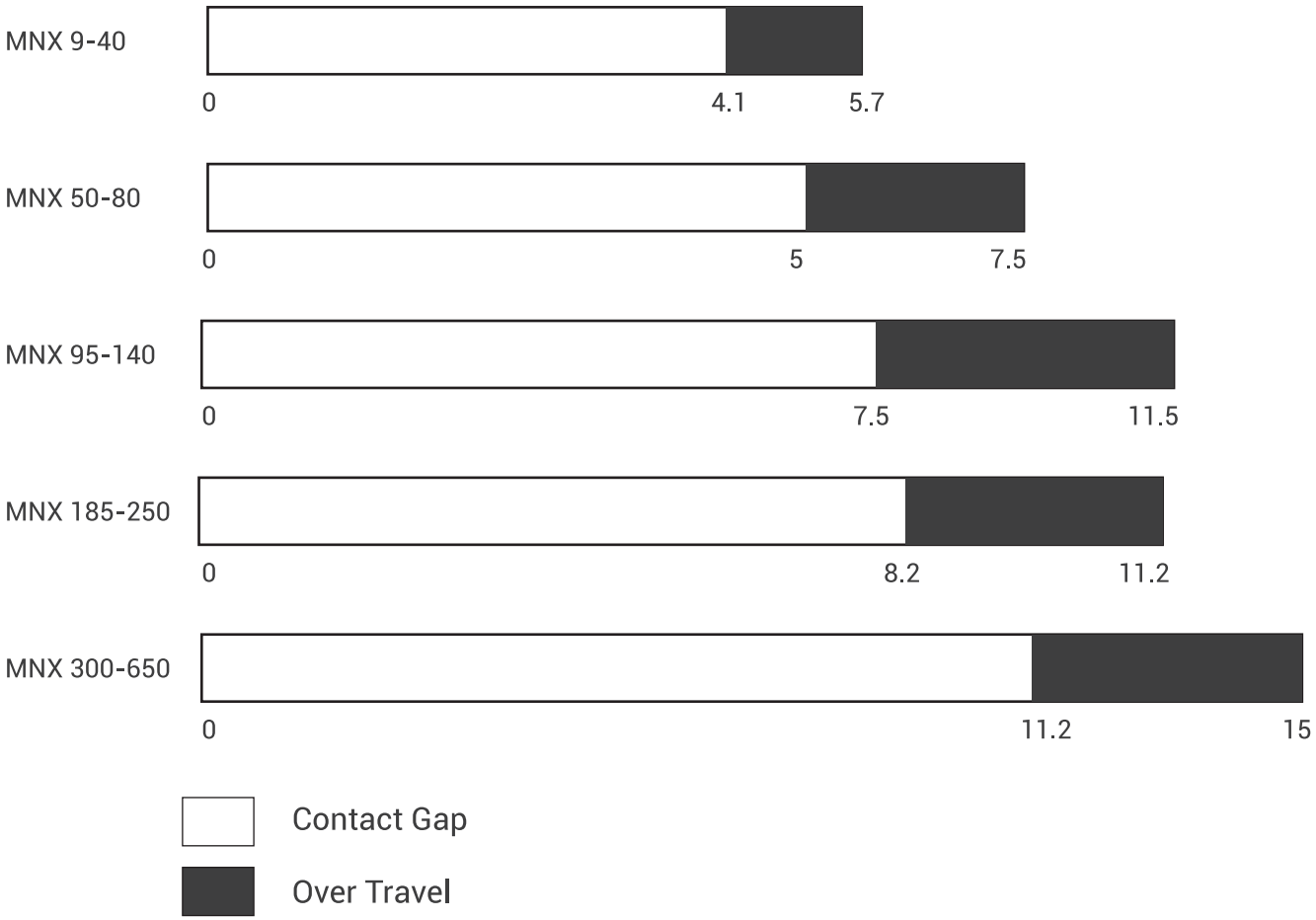

Mounting Position

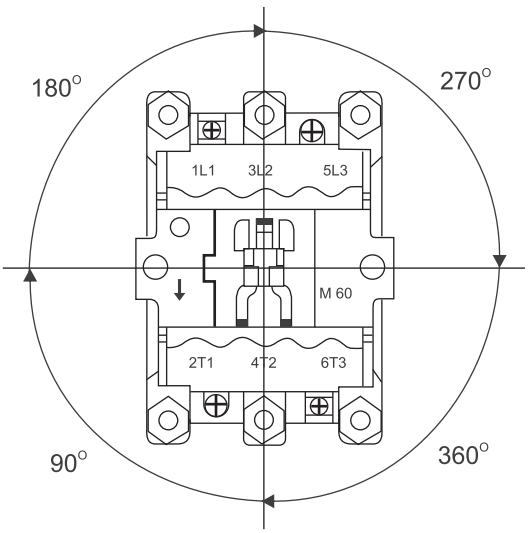

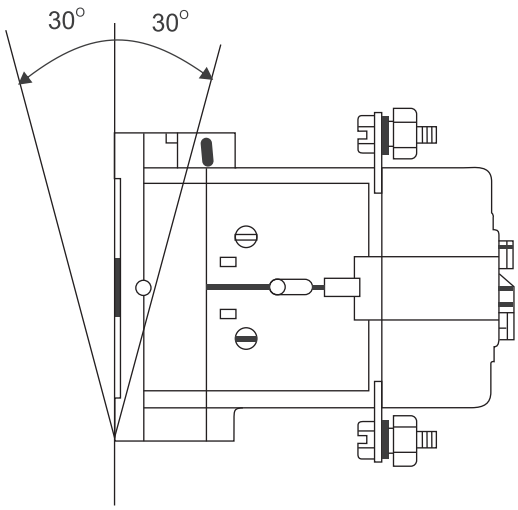

Terminal Designation

MNX Frame I : 9A - 22A

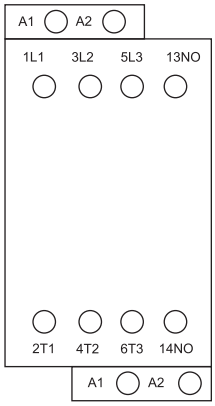

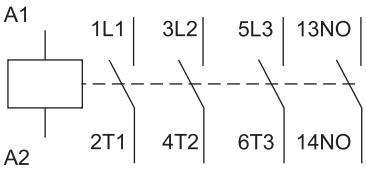

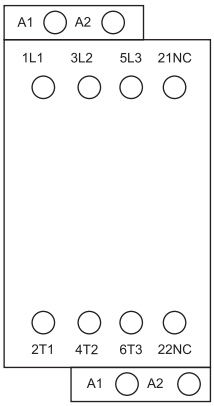

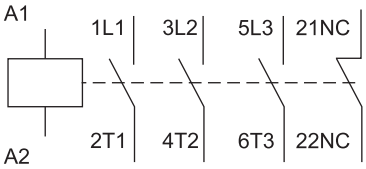

MNX Frame II : 25A - 40A

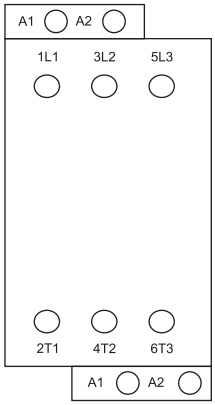

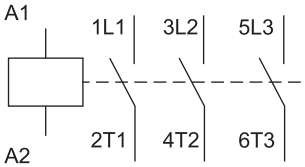

MNX Frame III : 50A - 80A

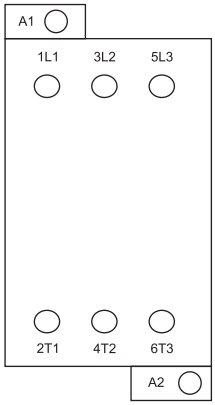

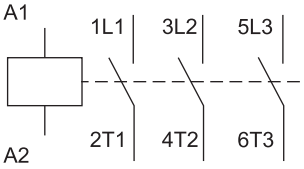

MNX Frame VI : 95A - 140A
MNX Frame V : 185A - 250A
MNX Frame VI : 300 - 400

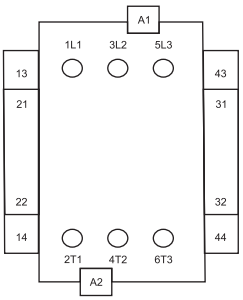

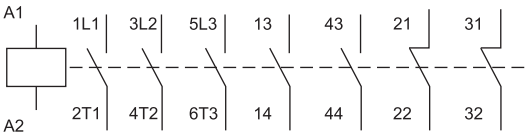

MNX Frame VI : 550A - 650A

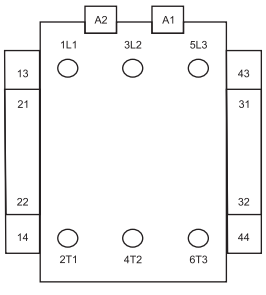

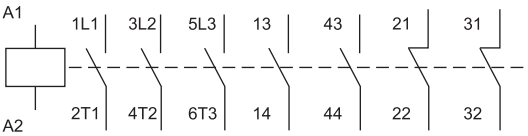

Over all Dimensions

MNX Frame I : 9A, 12A, 18A, 22A

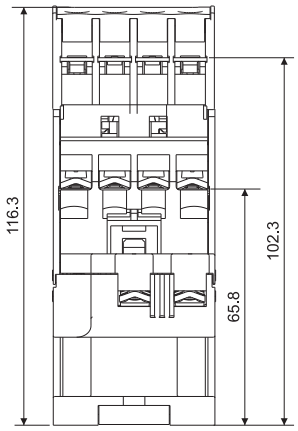

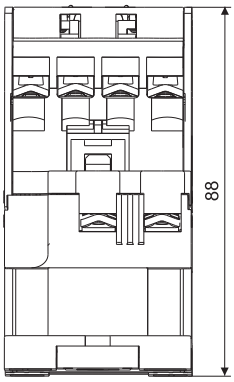

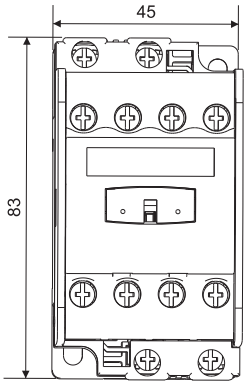

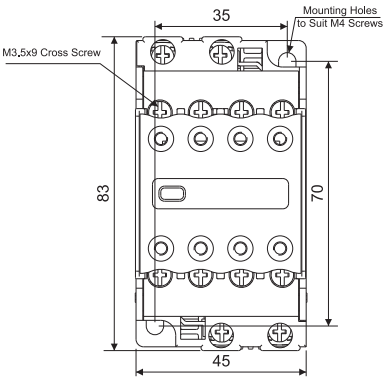

MNX Frame I : 9A, 12A, 18A, 22A (with MIL Kit)

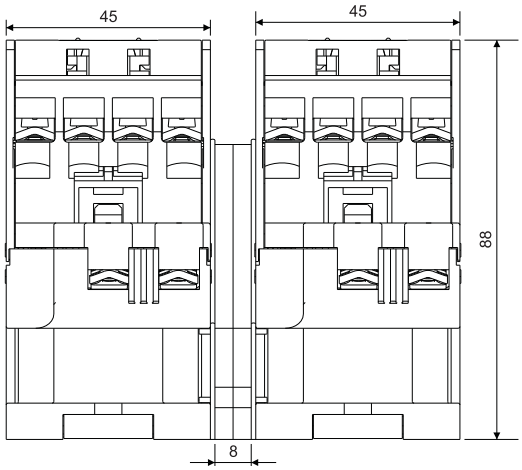

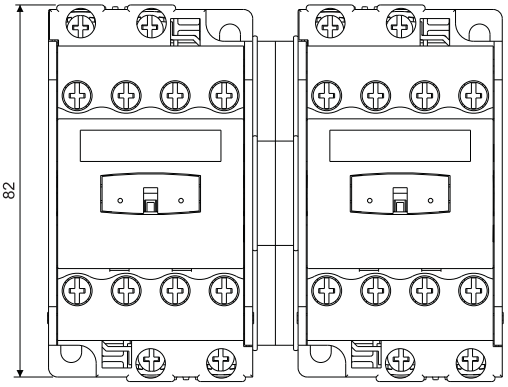

Note:
Dimension for 2 Pole contactor is same as dimension for 3 Pole contactor.

All dimensions in mm.

Over all Dimensions

MNX Frame II : 25A, 32A, 40A

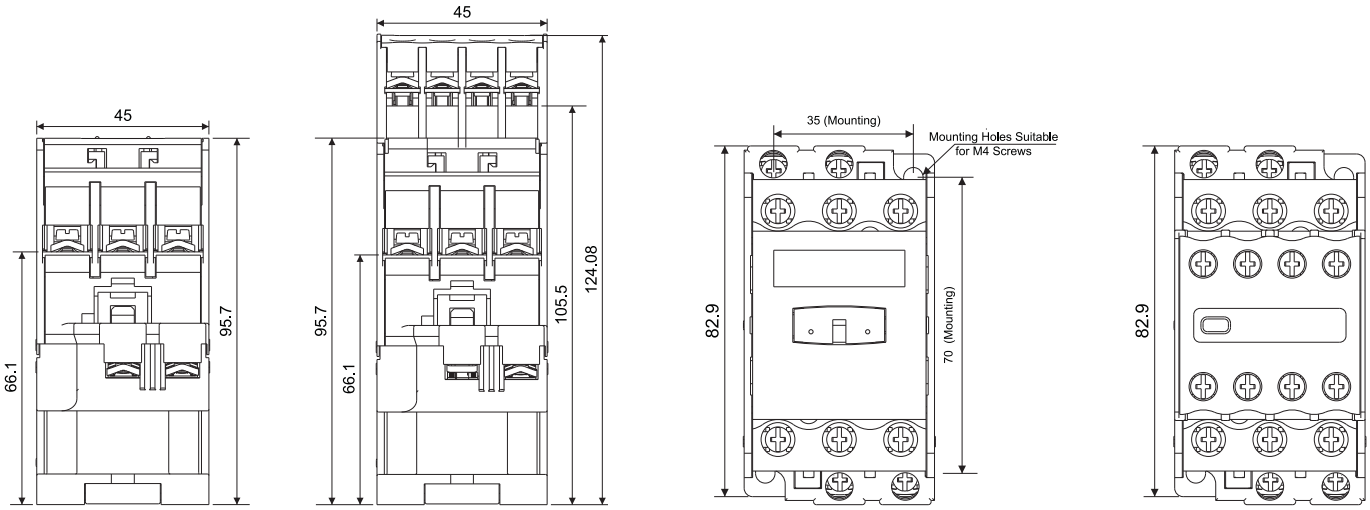

MNX Frame II : 25A, 32A, 40A (with MIL Kit)

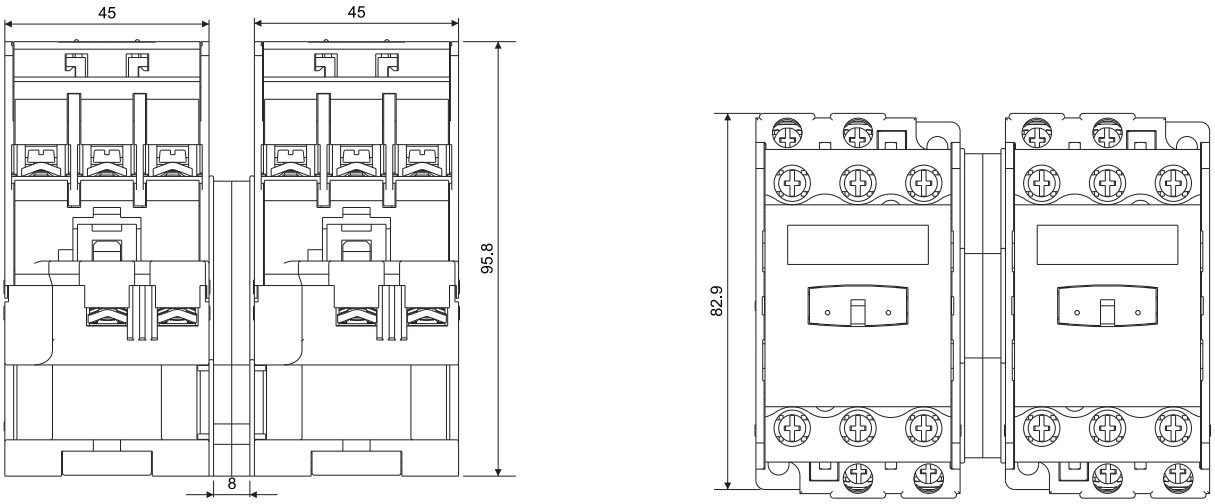

Note:
Dimension for 2 Pole contactor is same as dimension for 3 Pole contactor.

All dimensions in mm.

Over all Dimensions

MNX Frame III : 50A, 70A, 80A

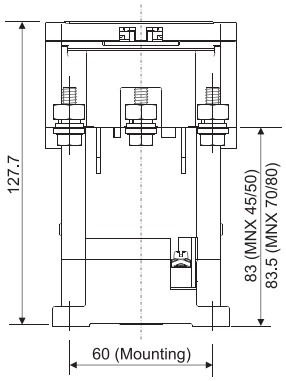

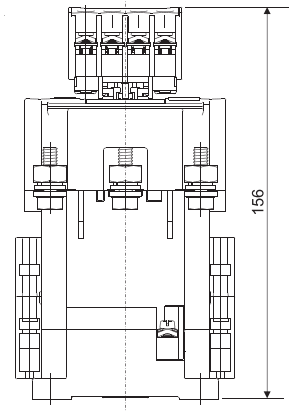

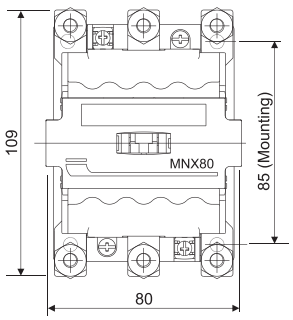

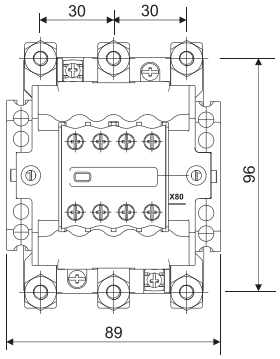

MNX Frame III : 50A, 70A, 80A (with MIL Kit)

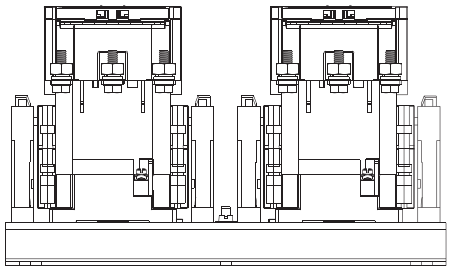

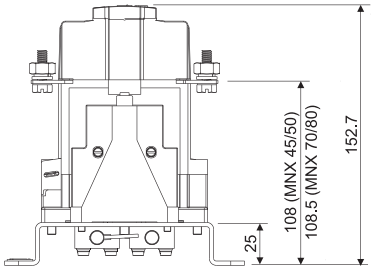

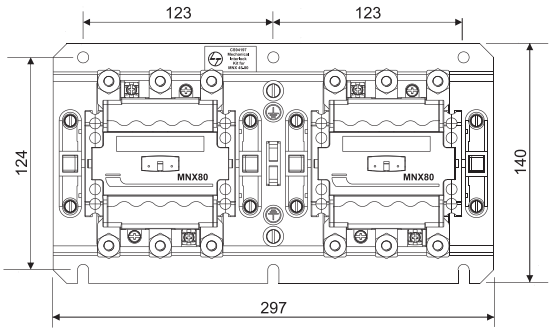

Note:
Dimension for 2 Pole contactor is same as dimension for 3 Pole contactor.

All dimensions in mm.

Over all Dimensions

MNX Frame IV : 95A, 110A, 140A

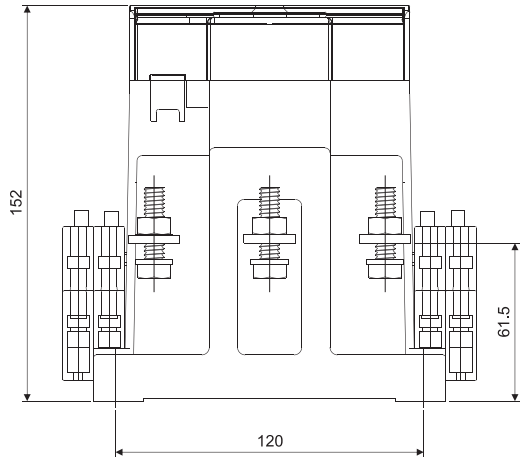

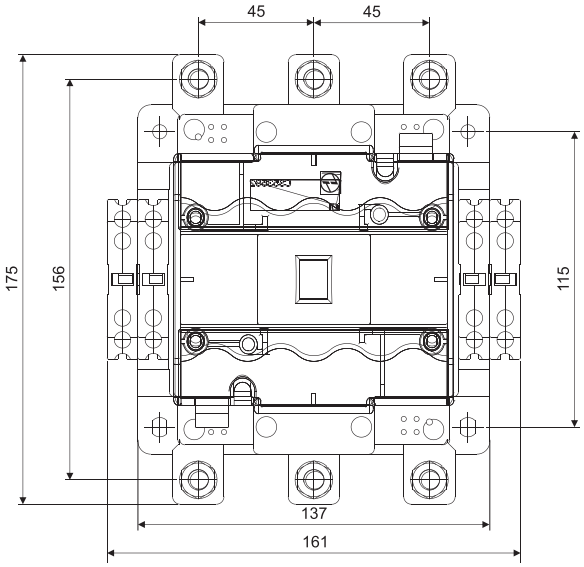

MNX Frame IV : 95A, 110A, 140A (with MIL Kit)

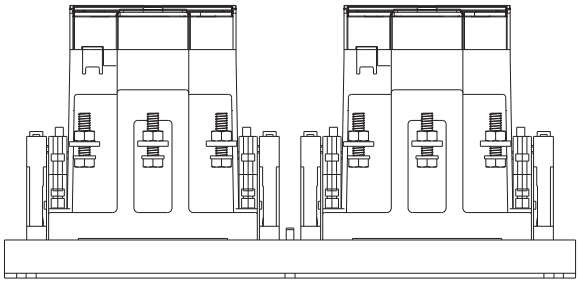

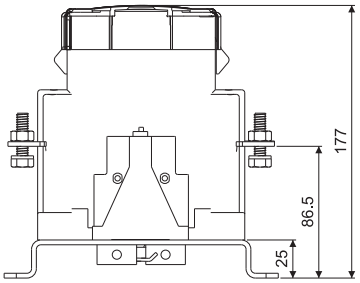

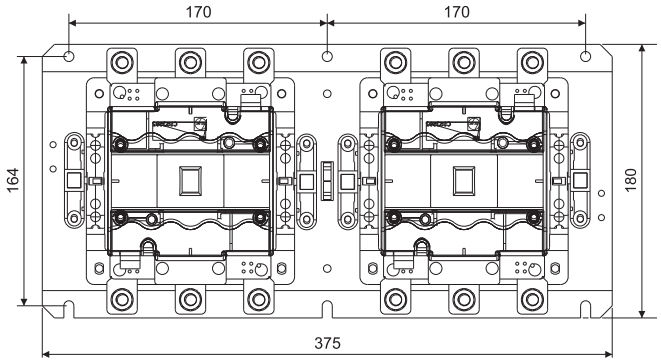

Note:
Dimension for 2 Pole contactor is same as dimension for 3 Pole contactor.

All dimensions in mm.

Over all Dimensions

MNX Frame V : 185A, 225A, 250A

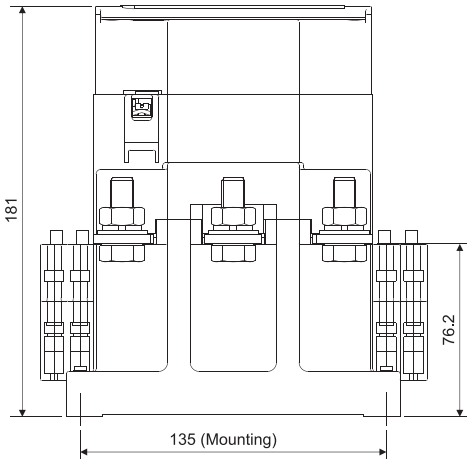

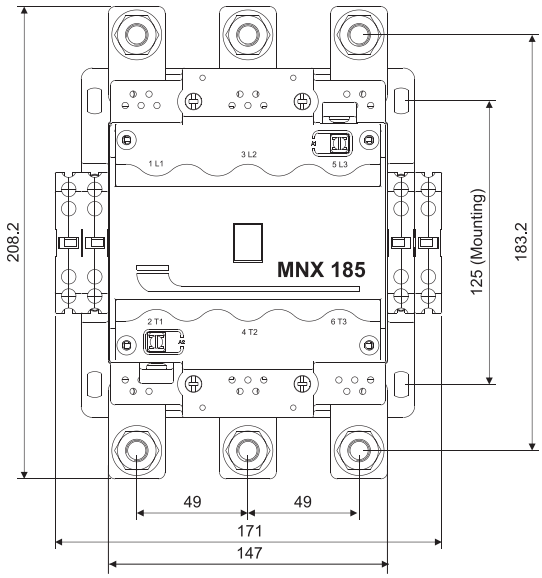

MNX Frame V : 185A, 225A, 250A (with MIL Kit)

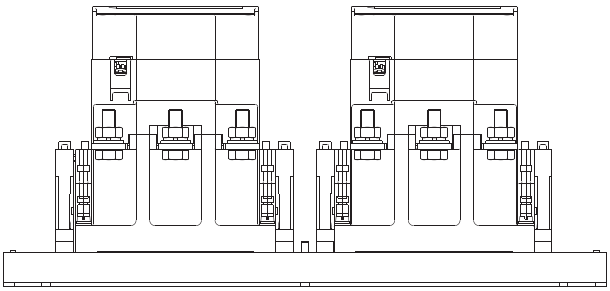

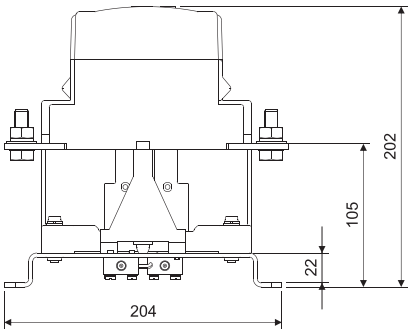

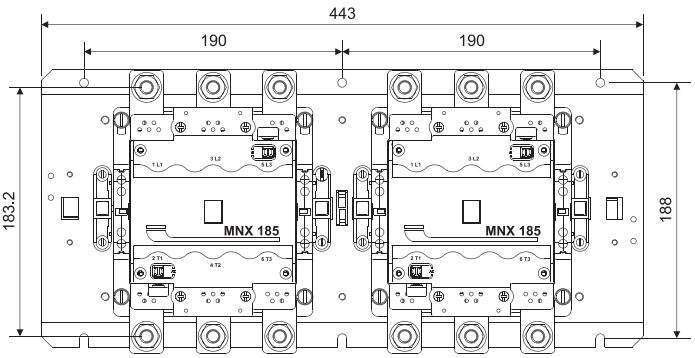

Note:
Dimension for 2 Pole contactor is same as dimension for 3 Pole contactor.

All dimensions in mm.

Over all Dimensions

MNX Frame VI : 300A, 400A, 550A, 650A

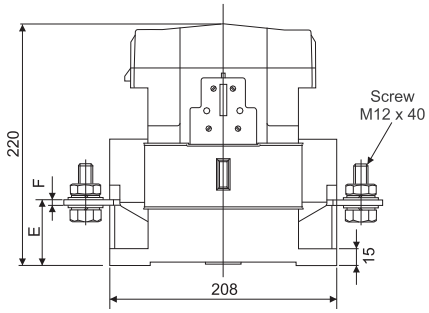

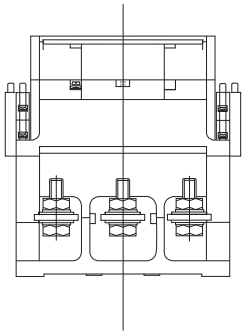

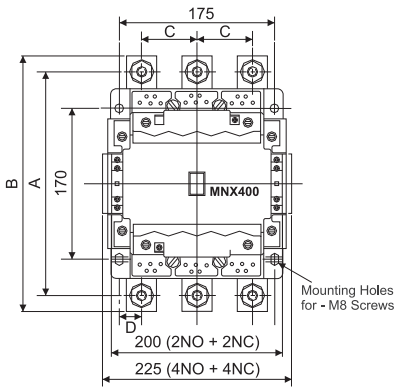

Contactor	MNX 300/400/550	MNX 650
A	241	259
B	275	296
C	62.5	74
D	35	40
E	55	56
F	5	6

MNX Frame VI : 300A, 400A, 550A, 650A (with MIL Kit)

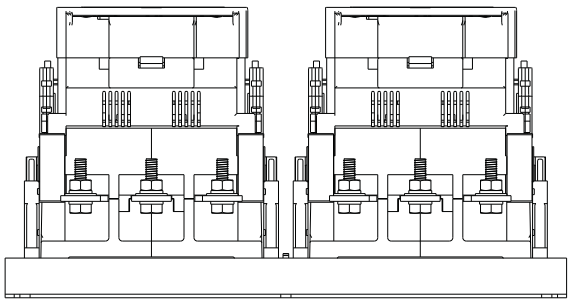

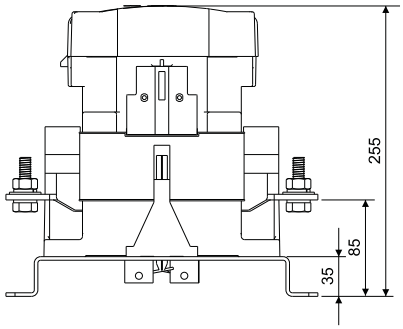

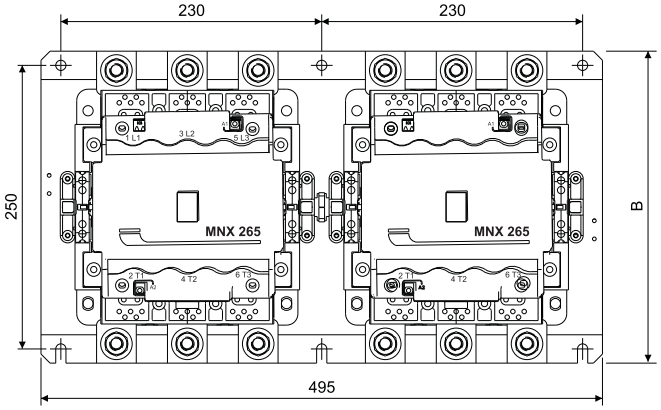

Contactor	MNX 300/400/550	MNX 650
b	275	296

Note:
Dimension for 2 Pole contactor is same as dimension for 3 Pole contactor.

All dimensions in mm.

MI Contactors

6-150A, AC-3 Rating



MI Contactors



		MI 6	MI 9	MI 12	MI 18	MI 22	MI 25
Catalogue no.		CS90401	CS90402	CS90403	CS90404	CS90405	CS90406
Frame		1	1	1	1	1	2
Conformance to standards		IS/IEC 60947-4-1, IEC 60947-4-1, EN 60947-4-1,					
Rated operational voltage U_e		415 V	415 V	415 V	415 V	415 V	415 V
Rated insulation voltage U_i		690 V	690 V	690 V	690 V	690 V	690 V
Rated impulse withstand voltage U_{imp}		8 kV	8 kV	8 kV	8 kV	8 kV	8 kV
Service temperature		(-20 to 55°C)	(-20 to 55°C)	(-20 to 55°C)	(-20 to 55°C)	(-20 to 55°C)	(-20 to 55°C)
Making capacity		60	90	120	180	220	250
Breaking capacity 415 V		48	72	96	144	176	200
Rated operational current I_e (A) @ 415 V	AC-1	25	25	30	30	32	45
	AC-3	6A/3kW/4hp	9A/4kW/5.5hp	12A/5.5 kW/7.5hp	18A /9.3 kW/12.5hp	22A/11kW/15hp	25A/13 kW/17.5hp
Mechanical life no. of operating cycles		15 million	15 million	15 million	15 million	15 million	10 million
Switching frequency operating cycles/Hr	Mechanical	3600	3600	3600	3600	3600	3600
	AC-1	3000	3000	3000	3000	3000	3000
	AC-3	750	750	750	750	750	750
No. of built in auxiliary contacts		1NO	1NO	1NO	1NO	1NO	-
No. of additional auxiliary contacts possible		8	8	8	8	8	8
Coil characteristics							
Voltage available @ 50 Hz*	(V)						
Pick-up	VA	68	68	68	68	68	68
	PF	0.82	0.82	0.82	0.82	0.82	0.82
	Watts	55.76	55.76	55.76	55.76	55.76	55.76
Hold-on	VA	11	11	11	11	11	11
	PF	0.36	0.36	0.36	0.36	0.36	0.36
	Watts	4	4	4	4	4	4
Limits of operation	Pick-up (% Uc)	80 - 110	80 - 110	80 - 110	80 - 110	80 - 110	80 - 110
	Drop-off (% Uc)	35 - 65	35 - 65	35 - 65	35 - 65	35 - 65	35 - 65
Dimensions							
Overall Dimensions (mm)	H	83	83	83	83	83	84.8
	W	45	45	45	45	45	45
	D	88.45	88.45	88.45	88.45	88.45	96.2

*Ordering Suffix for Coil Voltages

Std Coil voltage at 50 Hz	110	220	240	415
Ordering Suffix	AOOO	KOOO	BOOO	DOOO



MI 32	MI 40	MI 45	MI 50	MI 70	MI 80	MI 95	MI 120	MI 150
CS90407	CS90408	CS90704	CS90705	CS90706	CS90707	CS90724	CS90725	CS90726
2	2	3	3	3	3	4	4	4
415 V	415 V	415 V	415 V	415 V	415 V	415 V	415 V	415 V
690 V	690 V	690 V	690 V	690 V	690 V	690 V	690 V	690 V
8 kV	8 kV	8 kV	8 kV	8 kV	8 kV	8 kV	8 kV	8 kV
(-20 to 55°C)	(-20 to 55°C)	(-20 to 55°C)	(-20 to 55°C)	(-20 to 55°C)	(-20 to 55°C)	(-20 to 55°C)	(-20 to 55°C)	(-20 to 55°C)
320	400	450	500	700	800	950	1200	1500
256	320	360	400	560	640	760	960	1200
55	55	85	85	100	100	160	160	160
32A/17kW/22.5hp	40A/22.5kW/30hp	45A/25kW/34hp	50A/26kW/35hp	70A/37kW/50hp	80A/40kW/54hp	95A/45kW/ 60hp	120A/55kW/75hp	150A/80kW/110hp
10 million	10 million	10 million	10 million	10 million	10 million	10 million	10 million	10 million
3600	3600	3600	3600	3600	3600	3600	3600	3600
3000	3000	3000	3000	3000	3000	3000	3000	3000
750	750	750	750	750	750	750	750	750
-	-	-	-	-	-	-	-	-
8	8	8	8	8	8	8	8	8
110, 220, 240, 415								
68	68	190	190	190	190	550	550	550
0.82	0.82	0.77	0.77	0.77	0.77	0.64	0.64	0.64
55.76	55.76	146.3	146.3	146.3	146.3	352	352	352
11	11	21	21	21	21	36	36	36
0.36	0.36	0.26	0.26	0.26	0.26	0.28	0.28	0.28
4	4	5.5	5.5	5.5	5.5	10	10	10
80 - 110	80 - 110	80 - 110	80 - 110	80 - 110	80 - 110	80 - 110	80 - 110	80 - 110
35 - 65	35 - 65	35 - 65	35 - 65	35 - 65	35 - 65	35 - 65	35 - 65	35 - 65
84.8	84.8	109	109	109	109	175	175	175
45	45	80	80	80	80	137	137	137
96.2	96.2	127.7	127.7	127.7	127.7	152	152	152

Ordering Information

MI contactor					
Size	AC-3 Rating (A)	AC-1 Rating (A)	Type	Aux. Contacts	Cat. No.
Fr 1	6	25	MI 6	1 NO	CS90401
				1 NC	CS90409
	9	25	MI 9	1 NO	CS90402
				1 NC	CS90410
	12	30	MI 12	1 NO	CS90403
				1 NC	CS90411
	18	30	MI 18	1 NO	CS90404
				1 NC	CS90412
	22	32	MI 22	1 NO	CS90405
				1 NC	CS90413
Fr 2	25	45	MI 25	#	CS90406
	32	55	MI 32	#	CS90407
	40	55	MI 40	#	CS90408
Fr 3	45	85	MI 45	#	CS90704
	50	85	MI 50	#	CS90705
	70	100	MI 70	#	CS90706
	80	100	MI 80	#	CS90707
Fr 4	95	160	MI 95	#	CS90724
	120	160	MI 120	#	CS90725
	150	160	MI 150	#	CS90726

Accessories					
	Mounting	Configuration	Cat. No. MI 6 - 40	Cat. No. MI 45 - 80	Cat. No. MI 95 - 150
Add on Aux. Contact Block	Top	4 NO	CS906870000	CS906870000	-
		3 NO + 1NC	CS906880000	CS906880000	-
		2 NO + 2 NC	CS906890000	CS906890000	-
		1 NO + 3 NC	CS906900000	CS906900000	-
		4 NC	CS906910000	CS906910000	-
		2 NO	CS906920000	CS906920000	-
		1 NO + 1 NC	CS906930000	CS906930000	-
		2 NC	CS906940000	CS906940000	-
		1 NO	CS906950000	CS906950000	-
		1NC	CS906960000	CS906960000	-
Add on Aux. Contact Block	First left	1 NO + 1 NC	CS906990000	CS907430000	CS907960000
	First right	1 NO + 1 NC	CS907000000	CS907440000	CS907970000
	Second left	1 NO + 1 NC	-	CS907450000	CS907980000
	Second right	1 NO + 1 NC	-	CS907460000	CS907990000
Mechanical Interlock kit			CS906970000	CS907200000	CS907840000
Surge Suppressor 110V			CS90698B000	CS90719B000	CS90783A000
Surge Suppressor 220V/240V					CS90783B000
Surge Suppressor 415V			CS90698D000	CS90719D000	CS90783D000

*Ordering Suffix for Coil Voltages

Std Coil voltage at 50 Hz	110	220	240	415
Ordering Suffix	A000	K000	B000	D000

Dimensions

Frame 1

(6A, 9A, 12A, 18A, 22A)

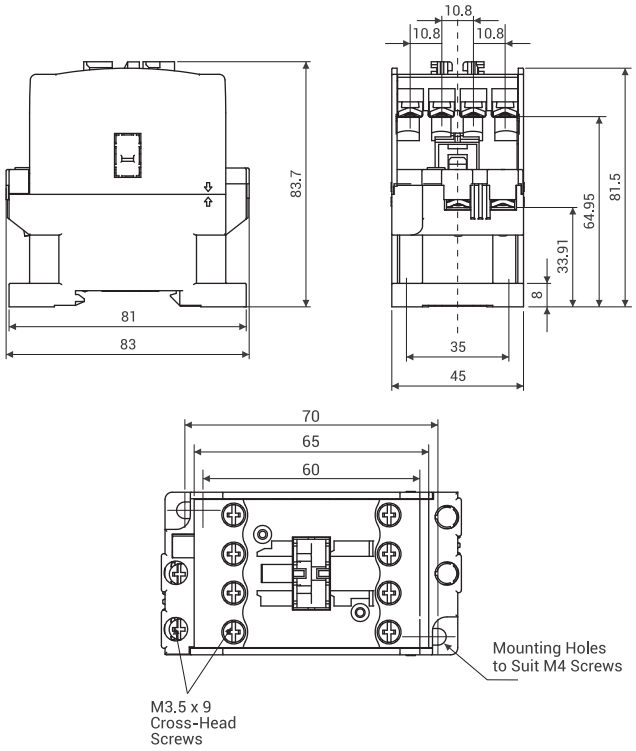

Frame 2

(25A, 32A, 40A)

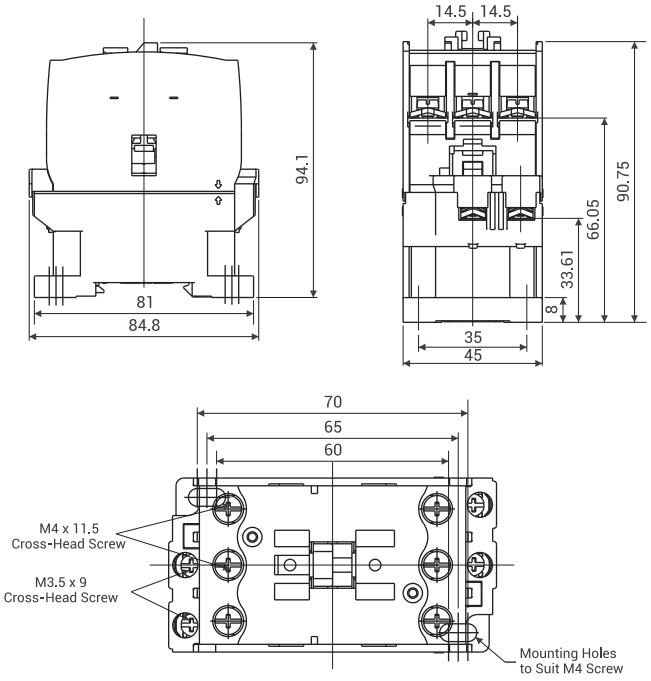

Frame 3

(45A, 50A, 70A, 80A)

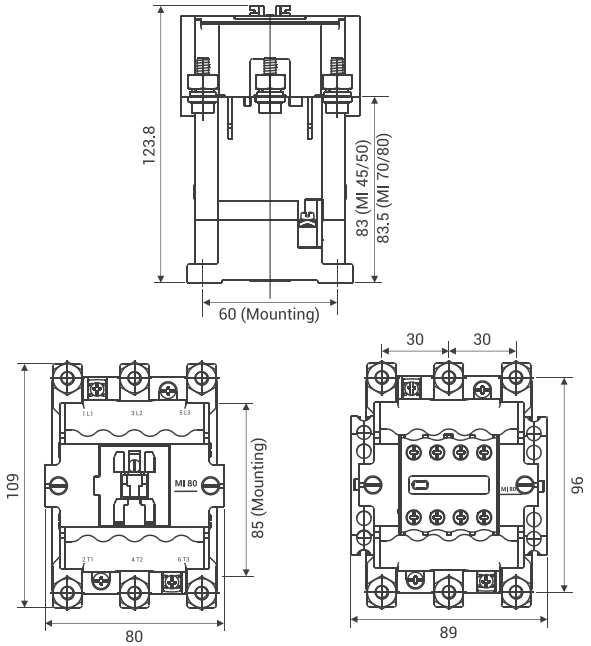

Frame 4

(95A, 120A, 150A)

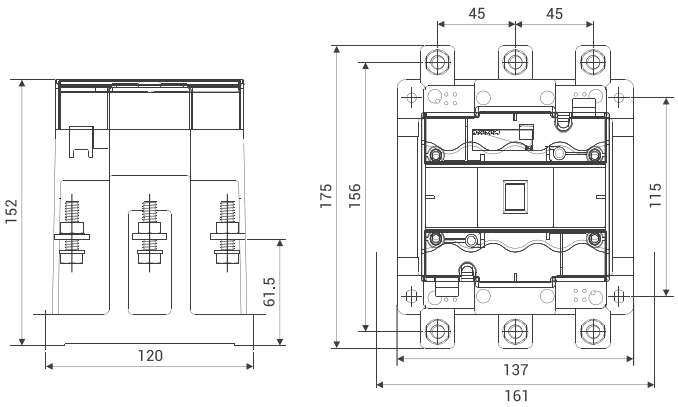

Selection Charts

Fuseless Protection for DOL Starter Feeder

SCPD Type	SCPD Type	Contactor Type	Relay Type
DN MCCB	MOG MMS	MI	MN
			

Sr. No.	Motor: 3Ø, 415V, 50 Hz			Contactor Type	Overload Relay		MMS / MCCB	
	hp	kW	FLC, In (A)		Type	Range (A)	Type	Rating (A)
1	0.16	0.12	0.51	MI 9	-	-	MOG-S1 / MOG-H1	0.4 - 0.63
2	0.25	0.18	0.6	MI 9	-	-	MOG- S1 / MOG-H1	0.63 - 1
3	0.33	0.25	0.8	MI 9	-	-	MOG-S1 / MOG-H1	0.63 - 1
4	0.5	0.37	1.2	MI 9	-	-	MOG- S1 / MOG-H1	1 - 1.6
5	0.75	0.55	1.5	MI 9	-	-	MOG-S1 / MOG-H1	1 - 1.6
6	1	0.75	2	MI 9	-	-	MOG- S1 / MOG-H1	1.6 - 2.5
7	1.5	1.1	2.7	MI 9	-	-	MOG-S1 / MOG-H1	2.5 - 4
8	1.75	1.3	3	MI 9	-	-	MOG- S1 / MOG-H1	2.5 - 4
9	2	1.5	3.5	MI 9	-	-	MOG-S1 / MOG-H1	2.5 - 4
10	3	2.2	4.9	MI 18	-	-	MOG- S1 / MOG-H1	4 - 6.3
11	4	3	6	MI 18	-	-	MOG-S1 / MOG-H1	4 - 6.3
12	5	3.7	7.5	MI 25	-	-	MOG- S1 / MOG-H1	6.3 - 10
13	5.5	4	8.5	MI 25	-	-	MOG-S1 / MOG-H1	6.3 - 10
14	7.5	5.5	11	MI 25	-	-	MOG- S1 / MOG-H1	9 - 13
15	10	7.5	14.5	MI 25	-	-	MOG- S1 / MOG-H1	11 - 16
16	15	11	21	MI 40	-	-	MOG- S1 / MOG-H1	19 - 25
17	17.5	13	24	MI 50	-	-	MOG- S1 / MOG-H1	24 - 32
18	20	15	29	MI 50	-	-	MOG - H2	28 - 40
19	25	18.5	35	MI 70	-	-	MOG - H2	35 - 50
20	30	22	40	MI 70	-	-	MOG - H2	35 - 50
21	40	30	54	MI 80	-	-	MOG-H2	45 - 63
22	50	37	68	MI 95	MN5	66-110	DN1-160M	100
23	60	45	81	MI 120	MN5	66-110	DN1-160M	125
24	75	55	94	MI 120	MN5	66-110	DN1-160M	160

Selection Charts

Fuseless Protection for Star- Delt Starter Feeder

SCPD Type	SCPD Type	Contactor Type	Relay Type
DN MCCB	MOG MMS	MI	MN
			

Sr. No.	Ratings at 3Ø, 415V, 50 Hz				Contactor Type			Overload Relay		MMS /MCCB	
	hp	kW	I (A)								
			Line	Phase	Star	Delta	Main	Type	Range (A)	Type	Rating (A)
1	0.33	0.25	0.8	0.5	MI 9	MI 9	MI 9	-	-	MOG-H1	0.63-1
2	0.5	0.37	1.2	0.7	MI 9	MI 9	MI 9	-	-	MOG-H1	0.63-1
3	0.75	0.55	1.5	0.9	MI 9	MI 9	MI 9	-	-	MOG-H1	1-1.6
4	1	0.75	2	1.2	MI 9	MI 9	MI 9	-	-	MOG-H1	1.6-2.5
5	1.5	1.1	2.7	1.6	MI 9	MI 18	MI 18	-	-	MOG-H1	2.5-4
6	1.75	1.3	3	1.7	MI 9	MI 22	MI 22	-	-	MOG-H1	2.5-4
7	2	1.5	3.5	2	MI 9	MI 22	MI 22	-	-	MOG-H1	2.5-4
8	3	2.2	4.9	2.8	MI 9	MI 25	MI 25	-	-	MOG-H1	4-6.3
9	4	3	6	3.5	MI 9	MI 25	MI 25	-	-	MOG-H1	6.3-10
10	5	3.7	7.5	4.3	MI 9	MI 25	MI 25	-	-	MOG-H1	6.3-10
11	5.5	4	8.5	4.9	MI 9	MI 25	MI 25	-	-	MOG-H1	6.3-10
12	7.5	5.5	11	6.4	MI 9	MI 25	MI 25	-	-	MOG-H1	9-13
13	10	7.5	14.5	8.4	MI 18	MI 32	MI 32	-	-	MOG-H1	14-20
14	12.5	9.3	17.3	10	MI 18	MI 32	MI 32	-	-	MOG-H1	19-25
15	15	11	21	12.1	MI 18	MI 32	MI 32	-	-	MOG-H1	19-25
16	17.5	13	24	13.9	MI 18	MI 40	MI 40	-	-	MOG-H1	24-32
17	20	15	29	16.7	MI 25	MI 40	MI 40	-	-	MOG-H1	24-32
18	25	18.5	35	20.2	MI 25	MI 70	MI 70	-	-	MOG-H2	35-50
19	30	22	40	23.1	MI 32	MI 70	MI 70	-	-	MOG-H2	45-63
20	40	30	54	31.2	MI 50	MI 95	MI 95	MN12	28-46.5	DN1-160M	125
21	50	37	68	39.3	MI 50	MI 95	MI 95	MN12	28-46.5	DN1-160M	160
22	60	45	81	46.8	MI 70	MI 95	MI 95	MN12	42-69	DN2-250M	200
23	75	55	94	54.3	MI 70	MI 95	MI 95	MN12	42-69	DN2-250M	200



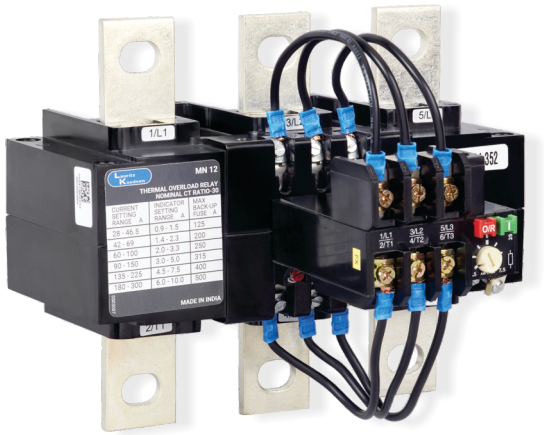

MN Thermal Overload Relays

MN Thermal Overload Relays, available from 0.2A to 570A complement the MNX range of power contactors. The relays are ambient temperature compensated, and the unique double slide mechanism providers reliable protection against single phasing. MN 12L relays with trip class 30 are specially designed for long starting time applications.

Technical Details

- Available in 3 frame sizes from 0.2-570A
- Direct mounting on MNX contactors
- Trip class 10A (30 available in MN 12L)
- Ambient temperature compensated
- Built-in single phasing protection






		Units	MN 2	MN 5	MN 12	MN 12L
Conformance to standards			IS/IEC 60947-4-1& IEC 60947-4-1			
Mounting			Direct	Direct	-	-
			Separate	Separate	Separate	Separate
Suitable for contactors			MNX 9, 12, 18 22, 25, 32, 40	MNX 50, 70, 80	MNX 95, 110, 140, 185, 225, 250 300, 400, 550, 650	
Rated insulation voltage	U_i	V	690	690	690	690
Rated impulse voltage	U_{imp}	kV	6	6	6	6
Service temperature		°C	-5°C to +55°C			
Start / OFF / Reset			1 Start & OFF / Reset			
Built-in contacts			2 NO + 1 NC	2 NO + 1 NC	2 NO + 1 NC	2 NO + 1 NC
Rated operational current for AC-15 utilization category at 50 Hz	24 V	A	6	6	6	6
	110 V	A	5	5	5	5
	220 V	A	3	3	3	3
	380 / 415 V	A	2	2	2	2
	500 V	A	2	2	2	2
Trip class		A	10	10	10	30
Max. frequency of operations		Cy / hr	30	30	30	30
Main terminal capacity	Lug	mm^2	10	50	240	240
Aux. terminal capacity	Wires	mm^2	2 x 2.5	2 x 2.5	2 x 2.5	2 x 2.5

I-T Characteristics

MN 2 / MN 5 / MN 12 Relay

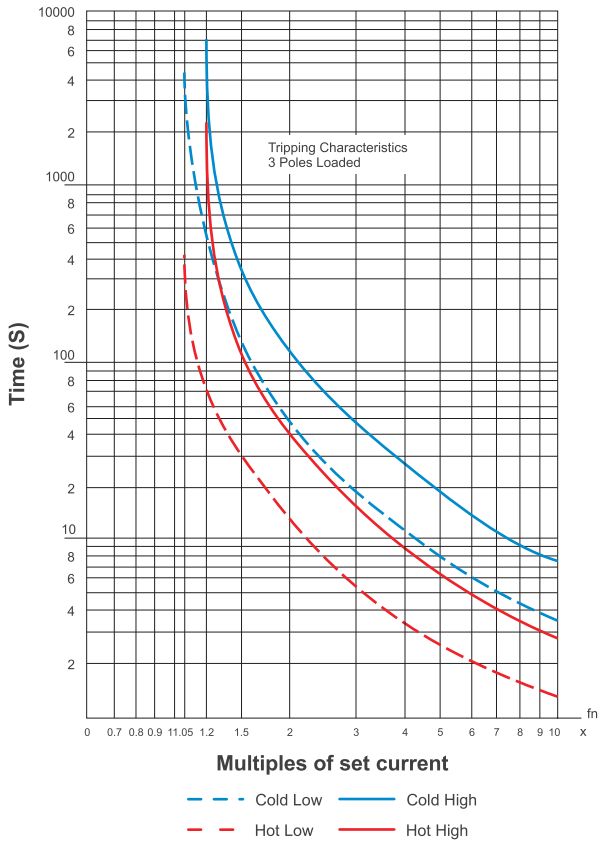

MN 2 / MN 5 / MN 12 Relay

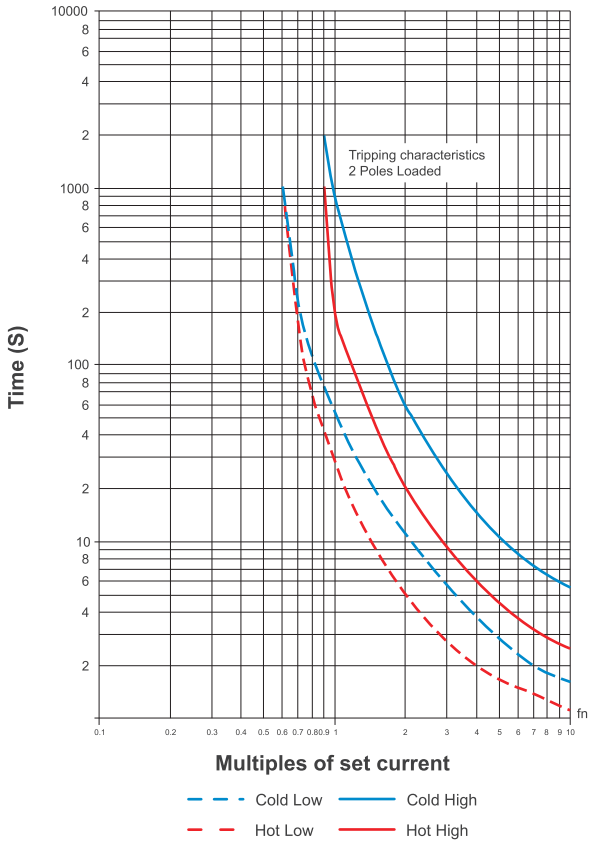

MN 12L Relay

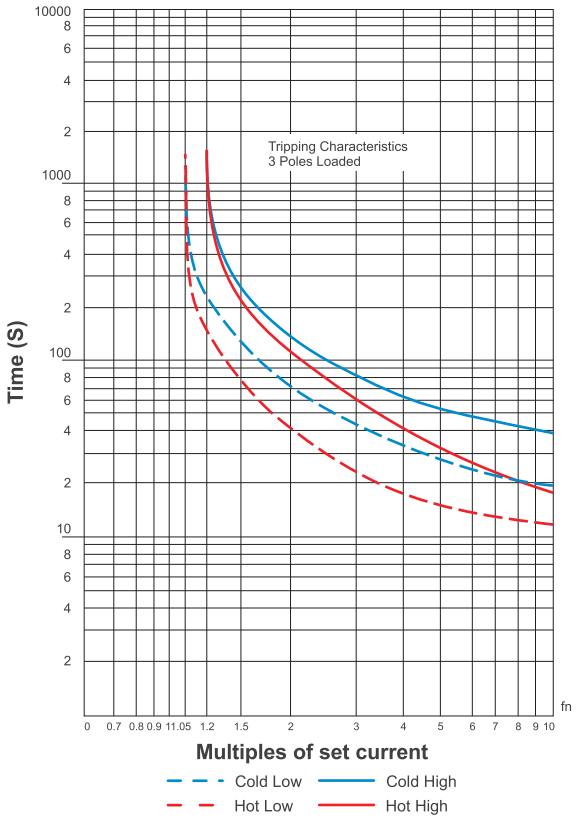

Ordering Information

MN Relays



Relay Mounting Kit



Kit for Mounting MN5 Relay



DIN Rail Mounting Kit MN2 Relay

Description	Cat. No.	Std. Pkg. (Nos.)
Push button unit for MK 1 / ML Relays	SS900040000	1
Push button extension unit for MN 2 Relays	SS949680000	100
Kit for Mounting MN 2 Relay on ML 1.5 contactor	SS947010000	50
Kit for Mounting MN 2 Relay separately (Direct Mounting Type)	SS947000000	50
Kit for Mounting MN 5 Relay on MNX 95 / 110 / 140 contactor	SS946380000	20
Kit for Mounting MN 5 Relay on ML 2 / ML 3 contactor	SS941510000	20
Kit for Mounting MN 5 Relay on ML 4 / ML 6 contactor	SS941520000	20
DIN Rail Mounting Kit Relay on MN 2 Relay	SS918870000	50

Relay Reset Cord For MN Relays



400 mm



650 mm



900 mm



1200 mm

Description	Cat. No.	Std. Pkg. (Nos.)
MN Relay reset cord - 400 mm	SB942070000	1
MN Relay reset cord - 650 mm	SB942080000	1
MN Relay reset cord - 900 mm	SB942090000	1
MN Relay reset cord - 1200 mm	SB942100000	1

Ordering Information



Type	Range (A)	Cat. No.
MN 2	0.2 - 0.33	SS94141OOEO
	0.3 - 0.5	SS94141OOGO
	0.45 - 0.75	SS94141OOJO
	0.6 - 1	SS94141OOKO
	0.9 - 1.5	SS94141OOMO
	1.4 - 2.3	SS94141OOPO
	2 - 3.3	SS94141OOQO
	3 - 5	SS94141OOSO
	4.5 - 7.5	SS94141OOUO
	6 - 10	SS94142OOVO
	9 - 15	SS94142OOBO
	14 - 23	SS94144OODO
	20 - 33	SS94145OOEO
	24 - 40	SS94145OOFO



Type	Range (A)	Cat. No.
MN 5	9 - 15	SS94135OOBO
	14 - 23	SS94135OODO
	20 - 33	SS94136OOEO
	30 - 50	SS94136OOGO
	36 - 60	SS94136OOTO
	45 - 75	SS94137OOJO
	66 - 110	SS94137OOKO



Type	Range (A)	Cat. No.
MN 12	28 - 46.5	SB94211OOGO
	42 - 69	SS94138OOHO
	60 - 100	SS94138OOKO
	90 - 150	SS94138OOMO
	135 - 225	SS94138OOPO
	180 - 300	SS94139OOQO
	270 - 450	SS94139OORO



Type	Range (A)	Cat. No.
MN 12L*	42 - 69	SS94127OOHO
	60 - 100	SS94127OOKO
	90 - 150	SS94127OOMO
	135 - 225	SS94127OOPO
	180 - 300	SS94127OOQO
	340 - 570	SS94127OOSO

*For motors with long starting time

Overall Dimensions

Thermal Overload Relay - Type MN

MN 2 (Separate Mounting)

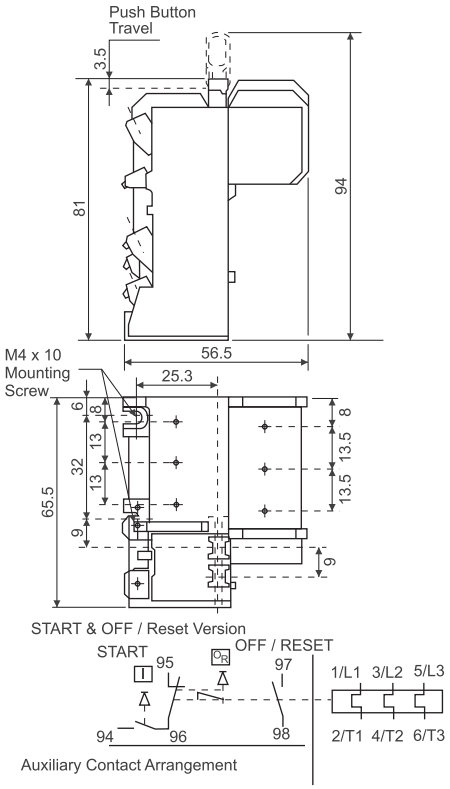

MN 5 (Separate Mounting)

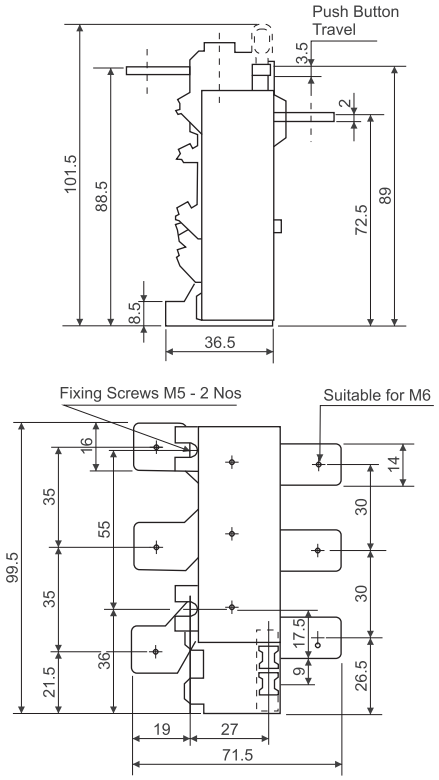

MN 12 / 12L (Relay)

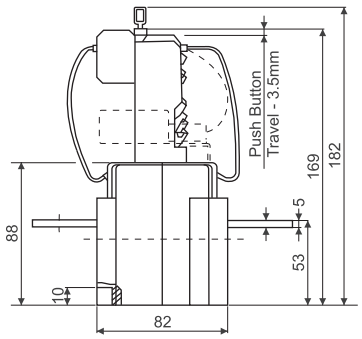

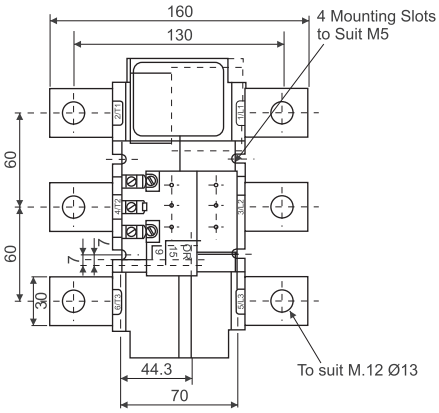

All dimensions in mm.





MDX DC Coil 3 Pole Power Contactors

MDX Power Contactors cater to all those applications where DC control supply is used. The range is available from 9A-110A AC-3 and the major applications are battery chargers, traction systems, UPS systems etc. Many critical installations like power generation equipment, crane terminals, hospital equipment also incorporate DC Coil contactors.

Efficient Switching now with DC Control



Technical Details

MDX 50-80 with universal electronic AC/DC coil





Type Designation		Units	MDX 9	MDX 12	MDX 18
Catalogue no.			CS96564	CS96565	CS96566
Conformance to standards					
Power contacts					
No. of poles			3	3	3
Rated insulation voltage U_i		V	690	690	690
Rated impulse withstand voltage U_{imp}		kV	6	6	6
Operational current Motor duty: 3Φ, 415 V, 50 Hz	Conventional free air Thermal current I_{th} (40°C)	A	25	28	32
	Utilization category AC-3 (55°C)	A / kW	9 / 4.5	12 / 6.2	18 / 9
Rated kW	240V		2.2	3.2	4
	415V		4.5	6.2	9
	690V		7.5	10	10
Rated making capacity		A	250	250	250
Rated breaking capacity (≤ 440 V)		A	250	250	250
Operation current I_e for AC-4 Utilization category at 415 V, 3Φ, 50 Hz for 200000 operating cycles		A	4.9	7.9	8.5
Permissible short time ratings	10s	A	110	110	130
Mechanical life		million	20	20	20
Electrical life at 415V, AC-3 Utilization category		million	2	2	1.6
Max. frequency of operations		cy/hr	3600	3600	3600
Ambient Temperature around the device	Service temperature	°C			
	Storage Temperature				
Degree of Protection	From front				
Fuse protection against short circuit, gG			25	32	32
Maximum altitude without deration		m			
Auxliary contacts					
No. of in built auxiliary contacts			1 NO	1 NO	1 NO
Conventional thermal current I_{th} at 55°C		A	10	10	10
Terminal capacity	Flexible w/o lug	mm^2	1 - 6	1 - 6	1 - 6
	Flexible c/w lug	mm^2	6	6	6
Coil characteristics					
Coil voltage available		VDC			
Average hold on coil consumption		Watts	5.4	5.4	5.4
Limits of operation	Pick-up	% U_c	70 - 125	70 - 125	70 - 125
	Drop-off	% U_c	10 - 40	10 - 40	10 - 40
Pick-up		VA	75	75	75
Hold-on		VA	9	9	9
Overall dimensions	Height	mm	81	81	81
	Width	mm	45	45	45
	Depth	mm	98.5	98.5	98.5
	Weight	Kg	0.47	0.47	0.47

Add on Block can be ordered separately.

Technical Details










MDX 25	MDX 32	MDX 38	MDX 50*	MDX 65*	MDX 80*	MDX 95	MDX 115
CS96567	CS96552	CS96553	CS91584*	CS91585*	CS91586*	CS91587*	CS91588*
IS/IEC 60947-4-1& IEC 60947-4-1							
3	3	3	3	3	3	3	3
690	690	690	1000	1000	1000	1000	1000
6	6	6	8	8	8	8	8
32	56	56	90	110	125	125	125
25 / 13.4	32 / 17	38 / 18.5	50 / 27.2	65 / 36	80 / 46	95 / 55	115 / 66
7	8.8	11	15	18.5	22	27.6	33
11	17	18.5	30	36	45	55	66
18	22	22	37	45	55	74	80
250	480	480	800	1090	1200	1200	1200
250	480	480	800	1090	1200	1200	1200
10	13.5	15.5	28	31	38	43	43
160	320	320	390	390	480	760	880
20	20	20	15	15	15	15	15
1.2	1.6	1.4	1.5	1.4	1.3	1.2	0.8
3600	3600	3600	1500	1500	1500	3600	3600
			(-50°C to + 70°C)				
			(-60°C to + 80°C)				
	IP20						
50	63	63	100	125	160	160	160
	3000						
1 NO	#	#	#	#	#	#	#
10	10	10	10	10	10	10	10
1 - 6	2.5	2.5	2.5	2.5	2.5	2.5	2.5
6	2.5	2.5	2.5	2.5	2.5	2.5	2.5
	24 / 48 / 110 / 220			24-48, 60-110, 110-240V AC/DC		24 / 48 / 110 / 220	
5.4	5.4	5.4	2.5	2.5	2.5	15	15
70 - 125	70 - 125	70 - 125	80 - 110	80 - 110	80 - 110	80 - 110	80 - 110
10 - 40	10 - 40	10 - 40	20 - 55	20 - 55	20 - 55	10 - 25	10 - 25
75	75	75	85	85	85	220	220
9	9	9	4.4	4.4	4.4	18	18
81	90	90	136	136	136	124	124
45	45	45	55	55	55	75	75
98.5	107.5	107.5	114.5	114.5	114.5	150.5	150.5
0.47	0.54	0.54	1.06	1.06	1.06	1.73	1.73

* Universal AC/ DC Electronic coil contactors

Technical Details





Type Designation		Units	MDX 9	MDX 12	MDX 18
Catalogue no.			CS96564	CS96565	CS96566
Conformance to standards					
Terminal capacity	Flexible w/olug	m	1 - 6	1 - 6	1 - 6
	Flexible c/wlug	mm^2	1 - 4	1 - 4	1 - 4
Terminal Torque (Nm)	Main pole terminal			1.5...1.8	
	Aux. Pole / Coil / Add on block Terminal				
Type of Terminal					Clamp-Screw
DC ratings with 3 poles in series and DC coil operation	DC 1(24 V)	A	20	22	22
	DC 1(48 V)	A	20	22	22
	DC 1(110 V)	A	15	16	16
	DC 1(220 V)	A	10	11	11
	DC 3-5 (24 V)	A	15	18	18
	DC 3-5 (48 V)	A	15	18	18
	DC 3-5 (110 V)	A	11	12	12
	DC 3-5 (220 V)	A	5	6	6
DC ratings (A) with 2 poles in series and DC coil operation	DC 1(24 V)	A	18	20	20
	DC 1(48 V)	A	18	20	20
	DC 1(110 V)	A	12	13	13
	DC 1(220 V)	A	8	8	8
	DC 3-5 (24 V)	A	13	15	15
	DC 3-5 (48 V)	A	11	13	13
	DC 3-5 (110 V)	A	7	8	8
	DC 3-5 (220 V)	A	1.5	1.5	1.5
DC ratings (A) with 1 pole in series and DC coil operation	DC 1(24 V)	A	15	17	17
	DC 1(48 V)	A	13	15	15
	DC 1(110 V)	A	6	6	6
	DC 1(220 V)	A	4	4	4
	DC 3-5 (24 V)	A	10	12	12
	DC 3-5 (48 V)	A	9	11	11
	DC 3-5 (110 V)	A	2	2	2
	DC 3-5 (220 V)	A	0.75	0.75	0.75

Technical Details










MDX 25	MDX 32	MDX 38	MDX 50	MDX 65	MDX 80	MDX 95	MDX 115
CS96567	CS96552	CS96553	CS91584	CS91585	CS91586	CS91587*	CS91588*
IS/IEC 60947-4-1& IEC 60947-4-1							
1 - 6	2. 5 - 16	2.5 - 16	4 - 50	4 - 50	6 - 50	6 - 50	6 - 50
1 - 4	1 - 10	1 - 10	4 - 50	4 - 50	6 - 50	6 - 50	6 - 50
	2.5...3				4...5		
			0.8...1				
		Double Lug-Clamp			Lug-Clamp		
23	32	36	60	70	100	100	100
23	32	34	60	70	100	100	100
18	27	34	55	60	85	85	85
12	16	26	45	50	55	55	55
22	30	32	50	55	80	80	80
22	28	28	50	50	70	75	75
15	20	23	30	35	60	60	60
8	12	15	20	25	35	35	35
23	32	36	60	70	100	100	100
23	32	34	60	70	100	100	100
16	25	32	50	60	80	80	80
8	14	20	36	36	40	40	40
18	25	28	35	45	60	60	60
18	22	25	35	40	50	55	55
10	15	18	25	30	40	40	40
1.5	3	4	5	5	7	7	7
20	30	35	45	50	70	70	70
18	26	30	40	50	60	60	60
6	8	8	8	8	8	8	8
4	5	5	6	6	6	6	6
15	20	24	30	35	40	40	40
13	17	20	25	25	30	30	30
2	2.5	2.5	2.5	3	3	3	3
0.75	1	1	1	1	1	1	1

Ordering Information

DC Contactors

Product Type	I_{th}	I_e (AC-3) at ≤ 440V	Motor Rating at 50 Hz				Terminal Type	In Built Auxiliary Contacts	Cat. No.*
	≤ 40°C	≤ 55°C	230 V	415 V	440 V	690 V			
	(A)	(A)	(kW)	(kW)	(kW)	(kW)		NO/NC	
MDX 9	25	9	2.2	4.5	4.8	7.5	Clamp-screw	1 NO	CS96564
MDX 12	28	12	3.2	6.2	6.2	10	Clamp-screw	1 NO	CS96565
MDX 18	32	18	4	9	9	10	Clamp-screw	1 NO	CS96566
MDX 25	32	25	7	13.4	13.4	11	Clamp-screw	1 NO	CS96567
MDX 32	56	32	8.8	17	17	22	Clamp-screw	-	CS96552
MDX 38	56	38	11	18.5	18.5	22	Clamp-screw	-	CS96553
MDX 50	90	50	14.3	27.2	27.2	43.5	Clamp-screw	-	CS91584
MDX 65	110	65	18.5	36	36	59.7	Lug-clamp	-	CS91585
MDX 80	125	80	23	46	46	74	Lug-clamp	-	CS91586
MDX 95	125	95	27.6	55	55	74	Lug-clamp	-	CS91587
MDX 115	125	115	33	66	70	80	Lug-clamp	-	CS91588

* Please add coil suffix as per required coil voltage.

Accessories

Add on Blocks				
For Contactor	Mounting	I_{th} (A)	Contact Combinations	Cat. No.
MDX 9 - 115	Top	10	1 NO + 1 NC	CS96568OOOO
MDX 9 - 115	Top	10	2 NO + 2 NC	CS96569OOOO
MDX 9 - 115	Side	10	1 NO + 1 NC	ST94985OOOO
MDX 9 - 115	Top	10	1 NO / 1 NC reversible	CS96586OOOO

Mechanical Interlock kit	
For contactor	Cat. No.
MDX 9 - 38	CS96572OOOO
MDX 50 - 115	CS96573OOOO



Add on Block



Surge Suppressor

Ordering Suffix for Coil Voltages

For MDX 9 – 38

Coil Voltage V DC	24	48	110	220
Suffix	4OOO	5OOO	1OOO	2OOO

*** For MDX 50 - 115**

Coil Voltage AC / DC	24 - 48	60 - 110	110 - 240
Suffix	JOOO	AOOO	BOOO

Electrical Life Curves

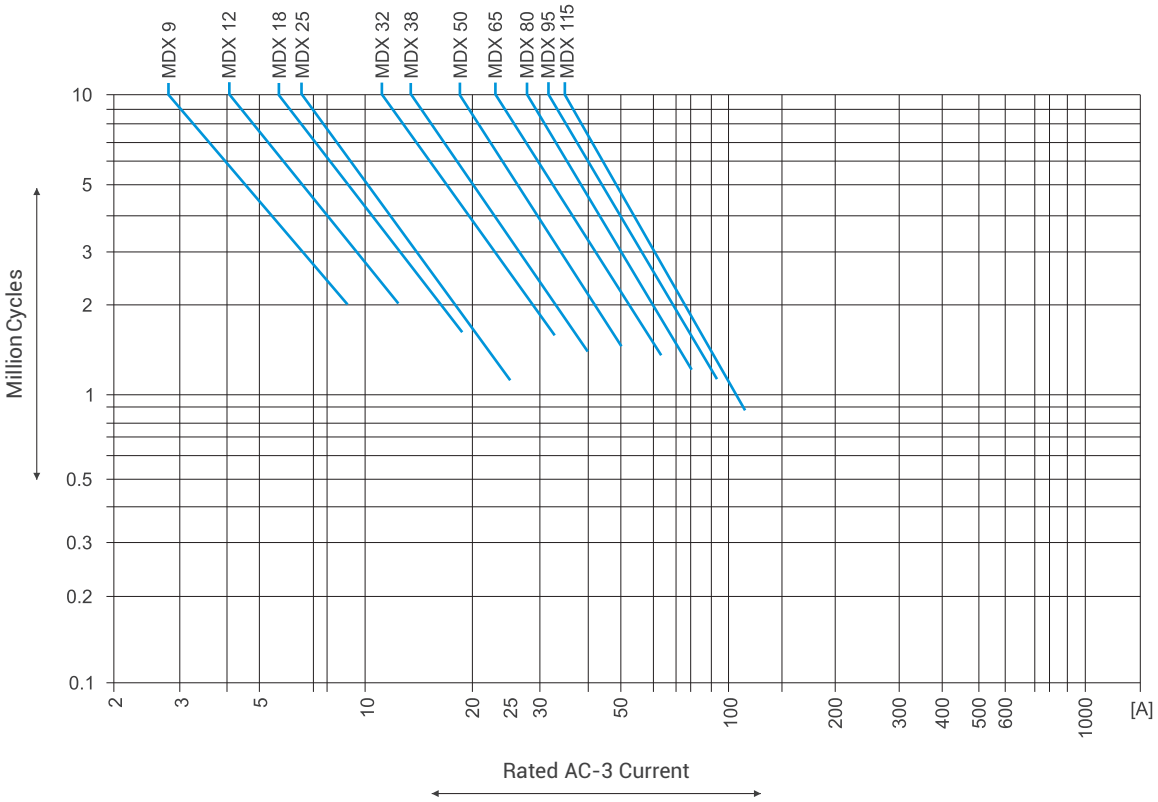

Mounting Position

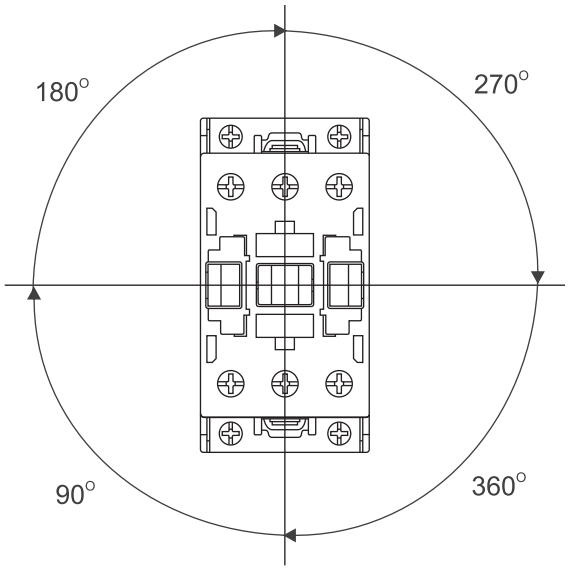

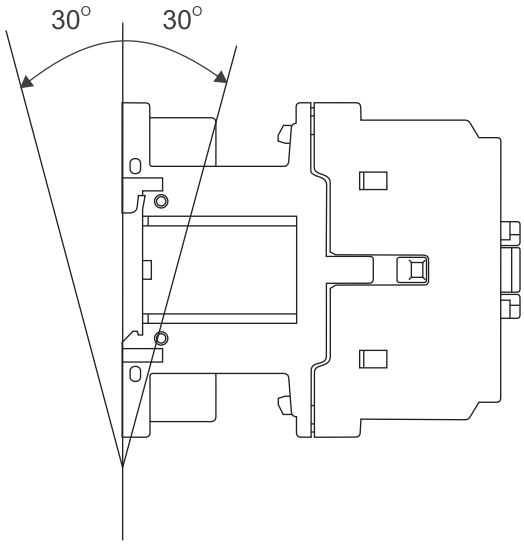

Terminal Designation

MDX 9 - 25 (with 1 NO)

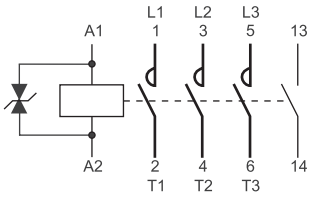

MDX 32 - 38

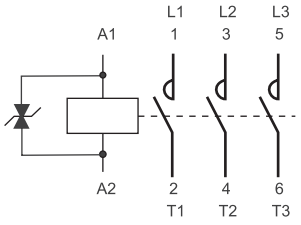

MDX 50 - 115

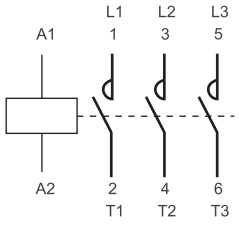

3 Pole in series

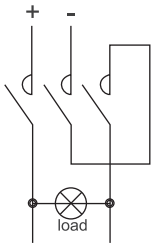

MDX 11E Top add on

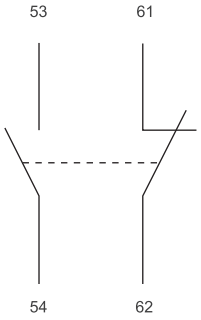

MDX 22E Top add on

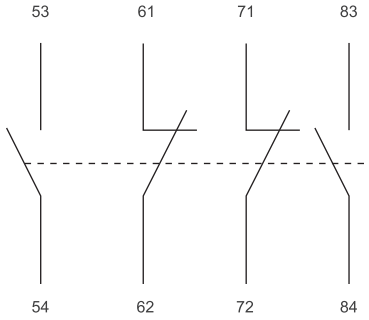

MDX 11E Side add on

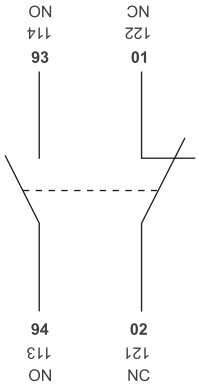

MDX Top add On 1 NO / 1 NC reversible (MDX 9 - 115)

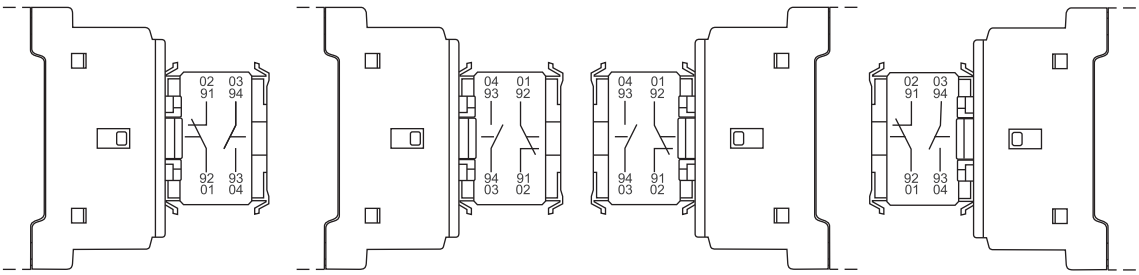

Overall Dimensions

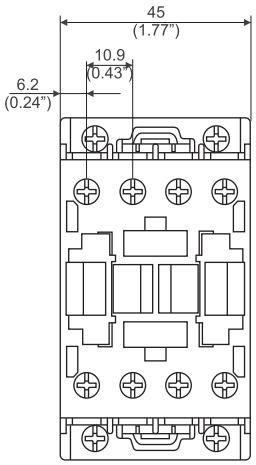

MDX 9 - 25

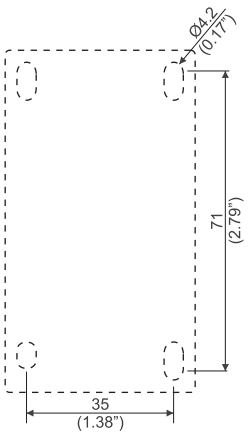

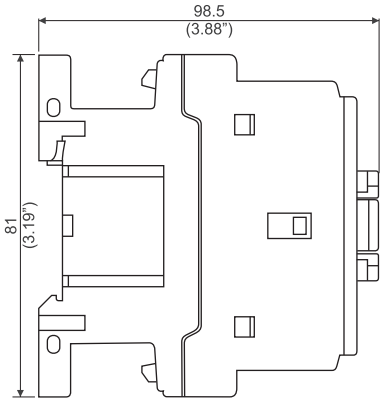

All dimensions in mm.

Overall Dimensions

MDX 32 - 38

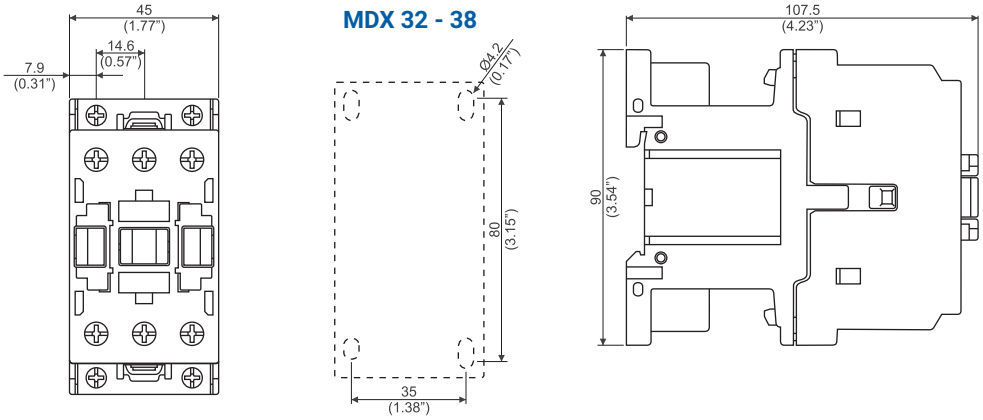

MDX 50 - 80

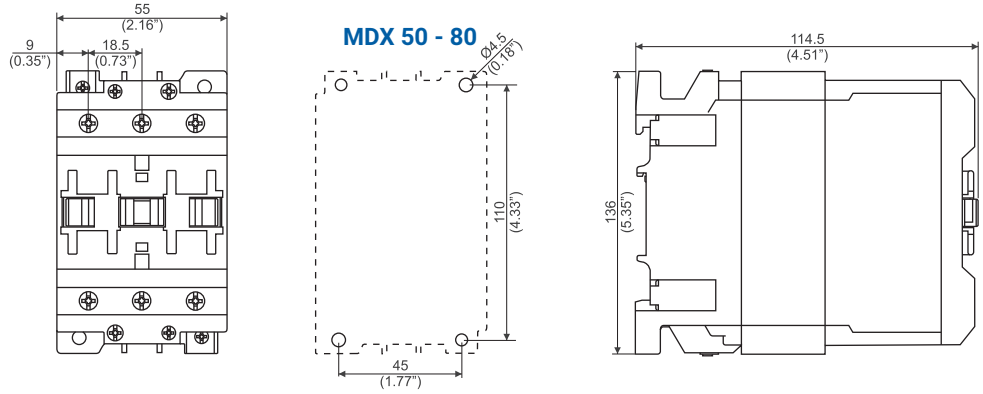

MDX 95 - 115

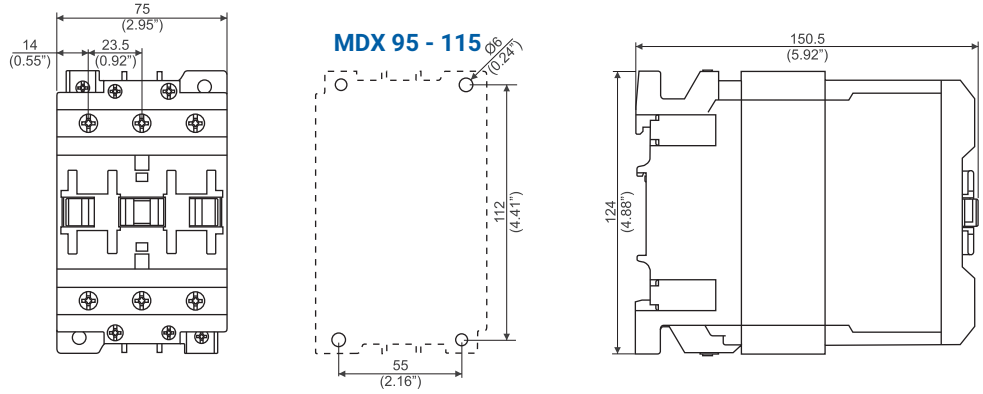

Side Add-on blocks

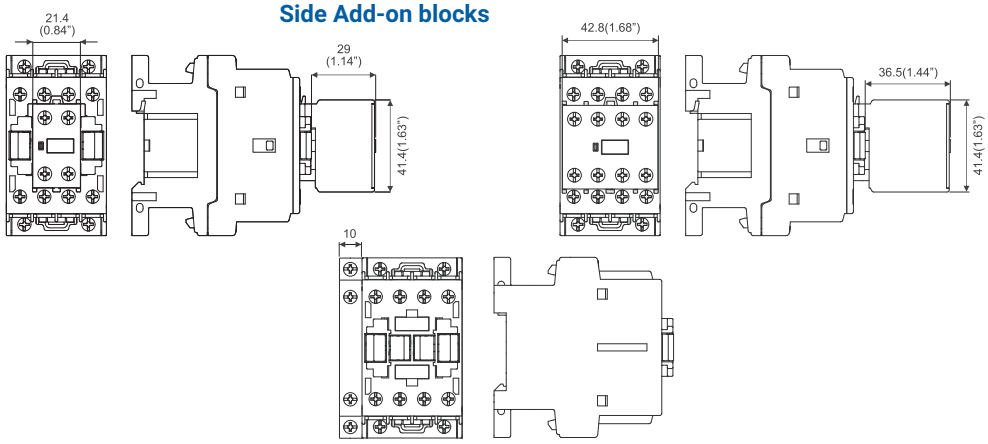

All dimensions in mm.

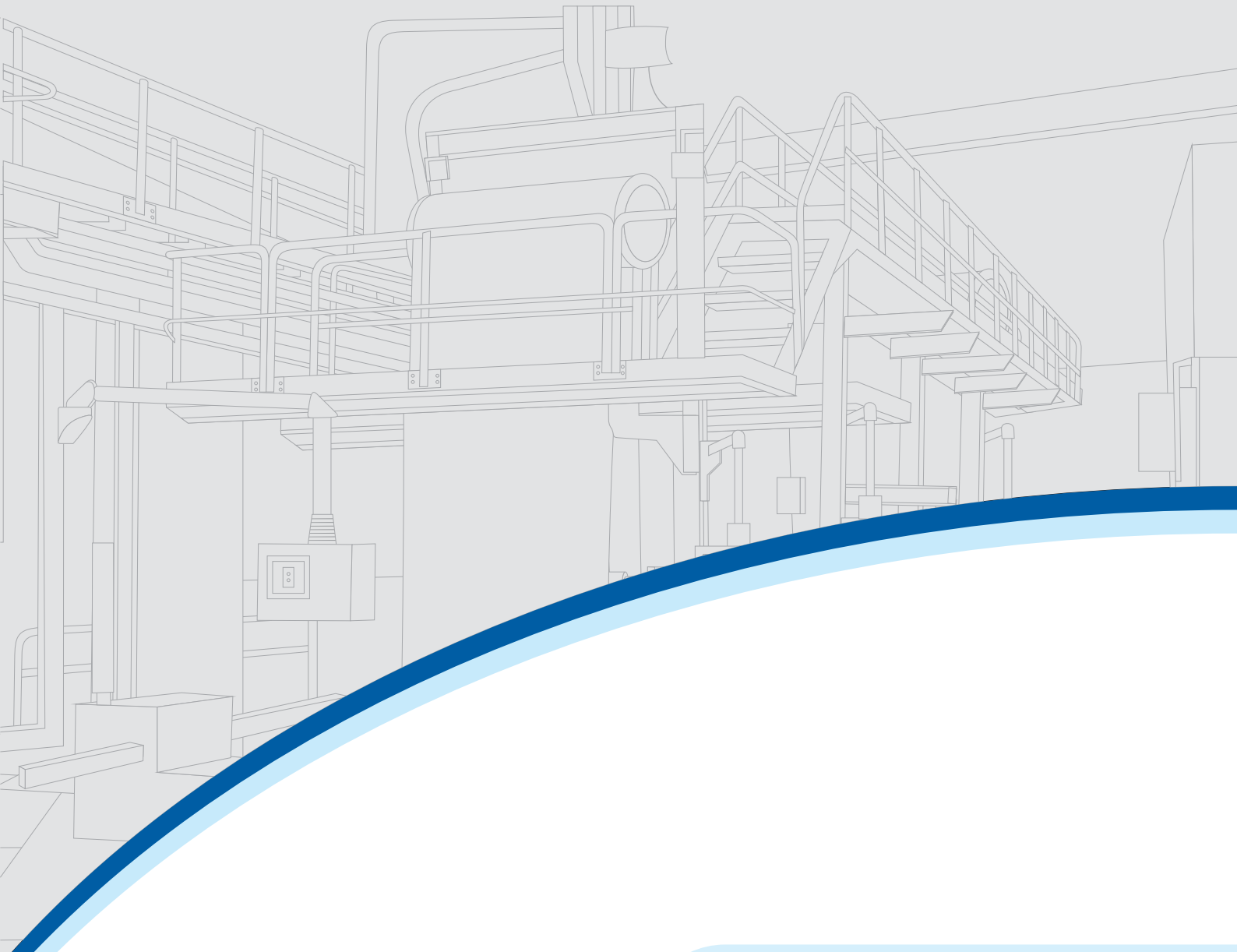



ML 3 Pole Power Contactors

ML Power Contactors are suitable for applications involving harsh environments. They are used in motor feeder applications in steel industries, material handling plants etc. The series includes a wide range from 25A to 300A (AC-3) and are complemented by ML Thermal Overload Relays.

Tap The Tough Solution



Technical Details

- Conforms to IS/IEC 60947-4-1, IEC 60947-4-1
- Range from 25A - 300A AC-3
- Rugged and designed for harsh operating conditions





Type		Units	ML1.5	ML2
Cat.no.			SS91851	SS90701
Conformance Standards				
No. of poles			3	3
Thermal rating / Utilization category AC-1 : 3 Ø, 415V, 50 Hz		A	25	40
U_i voltage, Insulation		V	500	500
Motor duty 3Ø, 415V, 50 Hz	Utilization Category AC-2	A	25	32
	Utilization Category AC-3	kW/A	11 / 25	15 / 32
	Utilization Category AC-4	kW/A	9 / 21	15 / 32
Operational Current Ie (AC-4 Utilization Category) For contact life of 300000 Operating cycles		A	13.5	17
I) Stator duty - 415V, 50Hz Duty factor (10 min. cycle duration)	20%	A	37	48
	40%	A	37	48
	60%	A	30	40
II) Rotor duty - Delta connected Duty factor (10 min. cycle duration)	20%	A	56	72
	40%	A	56	72
	60%	A	44	60
III) Max.Rotor Voltage (10min.cycle duration)	Starting	V	830	830
	Plugging	V	415	415
	Speed control	V	500	500
Making Capacity at 457V, Cos Ø - 0.35, 50 Hz		A	252	400
Breaking Capacity at 457V, Cos Ø - 0.35, 50 Hz		A	210	320
DC rating (with 3 poles in series) and AC coil operation	DC1 - 110V	A	25	32
	DC1 - 220V	A	25	32
	DC3 - 110V	A	25	32
	DC3 - 220V	A	10	32
	DC5 - 110V	A	25	32
	DC5 -220V	A	7.5	32
Mechanical life : No of operating cycles		mm	15 x 10^6	10 x 10^6
Max. Frequency of operation : Operating	Mechanical	cy/hr	3000	2000
	Utilization Category AC-1	cy/hr	3000	750
	Utilization Category AC-2	cy/hr	750	750
	Utilization Category AC-3	cy/hr	750	750
	Utilization Category AC-4	cy/hr	250	250
Service temperature		°C	-20°C to +55°C	-20°C to +55°C
Main terminal capacity	Wires	mm	2 x 10	2 x 25
	Lugs	mm	16	50
Auxiliary Contacts				
No. of built in auxiliary contacts			2 NO + 2 NC	2 NO + 2 NC
Operating Sequence				
Thermal Rating at 415V, 50 Hz			16	16
Aux. Terminal Capacity : Wires		mm^2	2 x 2.5	2 x 2.5
AC-15 Rating at 415V, 50Hz		A	4	4
Making Capacity at 415V, Cos Ø - 0.35, 50 Hz		A	80	80
Breaking Capacity at 415V, Cos Ø - 0.35 Ø, 50 Hz		A	70	70
Coil				
Voltages Available for 50Hz operation, Uc		V	24, 42, 110, 220, 240, 360, 380, 415, 440, 525	42, 110 60, 380
Pick-up	VA	VA	60	120
	Cos Ø		0.8	0.4
Hold-on	VA	VA	15	20
	Watts	W	5	8.5
Limits of operation	Pick-up (% Uc)	%Uc	75 - 110	75 - 110
	Drop-off (% Uc)	%Uc	65 - 15	65 - 15
Typical closing delay		ms	5 - 35	10 - 35
Typical opening delay		ms	5 - 20	5 - 25
Weight (unpacked)		kg	0.5	0.95

Technical Details







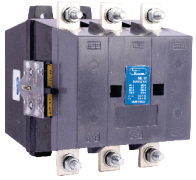

ML 3 SS90721	ML 4 SS90910	ML 6 SS90921	ML 12 SS91010
	IS/IEC 60947-4-1, IEC 60947-4-1		
3	3	3	3
45	100	125	400
500	660	660	660
40	70	110	300
22 / 40	37 / 70	55 / 110	165 / 300
22 / 40	37 / 70	45 / 85	140 / 250
22	35	46	112
60	95	165	375
60	95	165	375
50	78	135	310
90	157	270	560
90	157	270	560
75	118	206	465
830	830	830	830
415	415	415	415
500	500	500	500
480	840	1200	3000
400	700	1000	2500
40	63	85	300
40	63	85	300
40	63	85	300
40	63	63	300
40	63	85	300
40	63	63	300
10×10^6	10×10^6	10×10^6	10×10^6
2000	1200	1200	1200
750	1000	750	750
750	500	500	500
750	750	750	500
250	250	250	250
-20°C to +55°C	-20°C to +55°C	-20°C to +55°C	-20°C to +55°C
2 x 25	-	-	-
50	50	95	240
2 NO + 2 NC	2 NO + 2 NC	2 NO + 2 NC	2 NO + 2 NC
	Break Before Make		
16	16	16	16
2 x 2.5	2 x 2.5	2 x 2.5	2 x 2.5
4	4	4	4 A
80	80	80	80
70	70	70	70
220,240 415,440,525	110,220 240,415,525		110,220,240 380,415,525
120	450	450	1450
0.4	0.3	0.3	0.25
20	50	50	85
8.5	17	17	27
75 - 110	75 - 110	75 - 110	75 - 110
65 - 15	65 - 15	65 - 15	65 - 15
10 - 35	10 - 35	10 - 35	15 - 45
5 - 25	10 - 40	10 - 40	5 - 25
0.95	2.9	3	9.2

MI Thermal Overload Relay

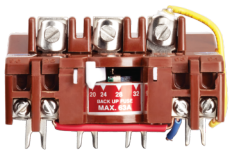



Type		Units	ML 1.5	ML 2/3
Cat. no.			SS91858	SS91859
Conformance Standards			IS/IEC 60947-4-1, IEC 60947-4-1	
Rated insulation voltage (U_i)		V	500	500
Rated impluse strength (U_{imp})		V	6	6
Service temperature		°C	-5°C to +55°C	-5°C to +55°C
Rated thermal current I_{th} at 415V, 50 Hz		A	6	6
Rated operational current for AC-15 utilizationcategory at 50 Hz	24V	A	6	6
	110V	A	5	5
	220V	A	3	3
	380 / 415V	A	2	2
	500V	A	2	2
Built in contacts			1 Start	1 Start
			1 Off / Reset	1 Off / Reset
			1 Alarm (NO)	1 Alarm (NO)
Tripping class		A	10	10
Max. Frequency of operation	Op. cycles / hr	cy / hr	30	30
Main Terminal capacity	Lug	mm^2	16	50
Aux. Terminal capacity	Wires	mm^2	2 x 2.5	2 x 2.5

I-T Characteristics

3 Pole Balanced Loading Condition

ML 1 (upto 6-10 Amps)

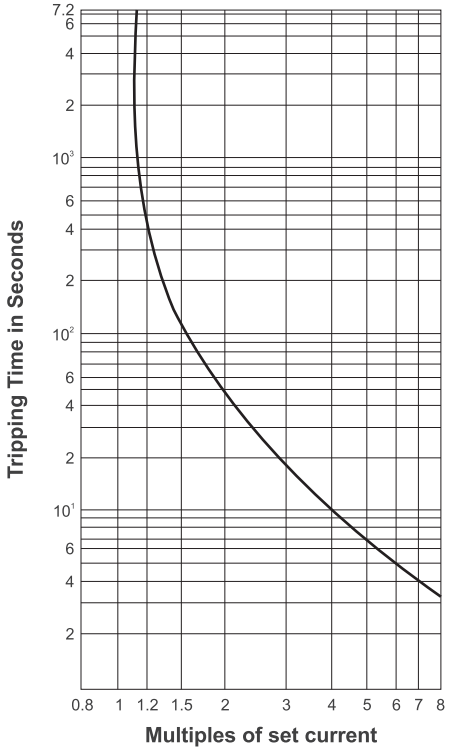

ML 1 (upto 10-16 Amps)

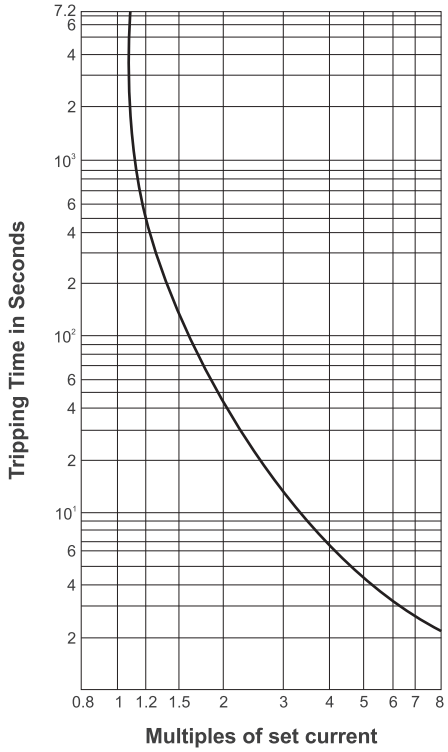

ML 2 / 3

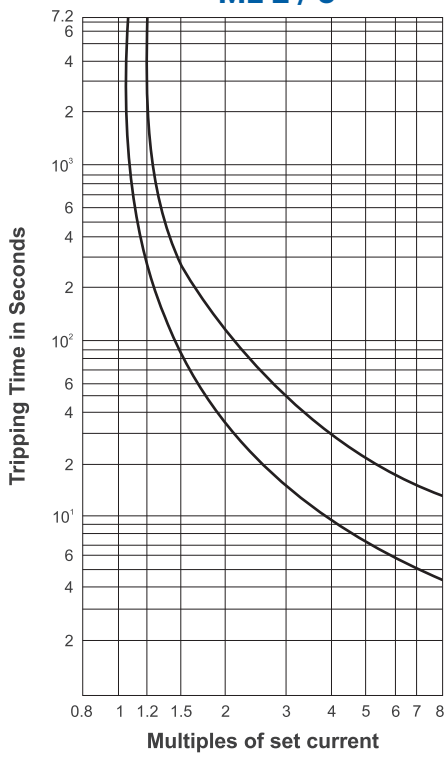

Ordering Information

ML Relays

Type	Range (A)	Cat. No.
ML 0 ML 1 ML 1.5	0.15 - 0.25	SS91858OODO
	0.25 - 0.4	SS91858OOFO
	0.4 - 0.65	SS91858OOHO
	0.6 - 1	SS91858OOKO
	1 - 1.6	SS91858OOMO
	1.5 - 2.5	SS91858OOPO
	2.5 - 4	SS91858OORO
	4 - 6.5	SS91858OOTO
	6 - 10	SS91858OOVO
	10 - 16	SS91858OOBO
ML 2 ML 3	9 - 14	SS91859OOAO
	13 - 21	SS91859OOCO
	20 - 32	SS91859OOEO
	28 - 42	SS91859OOFO

Accessories & Spares






Contactor Type	Aux. Add on Block	Spare Coil*	Spare Kit	Housing & Bridge Kit
ML 1.5	Not available	SS90873	SS95305	ST28734
ML 2	Not available	SS90545	SS95307	ST23866
ML 3			SS95309	
ML 4	SS91494	SS91258	SS95311	ST28735
ML 6			SS95313	
ML10	SS91474	SS91011	SS95315	-
ML 12			SS95317	-

* Add 4 digit suffix as per required coil voltage given below.

Ordering Suffix for Coil Voltages

Std Coil voltage at 50Hz	24	42	48	110	220	240	360	380	415	440	525
Ordering Suffix	GOOO	JOOO	HOOO	AOOO	KOOO	BOOO	COOO	LOOO	DOOO	POOO	MOOO

Overall Dimensions

ML 1.5 Contactor (Without shroud)

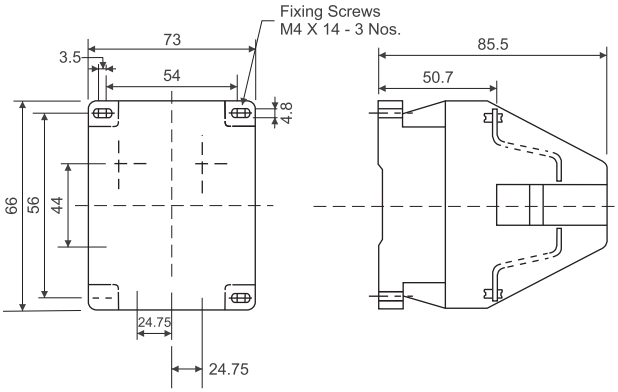

ML 4 Contactor

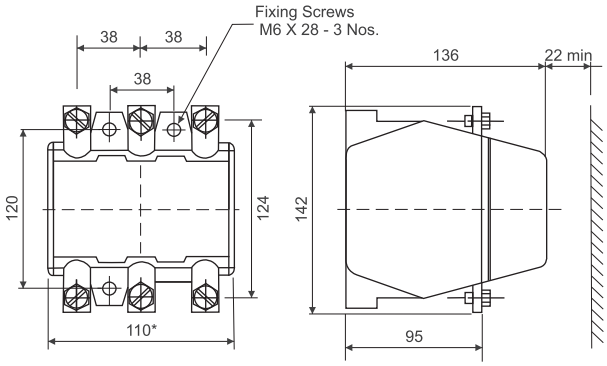

*Provide 12 mm extra for each Add-on block

ML 2 / 3 Contactor

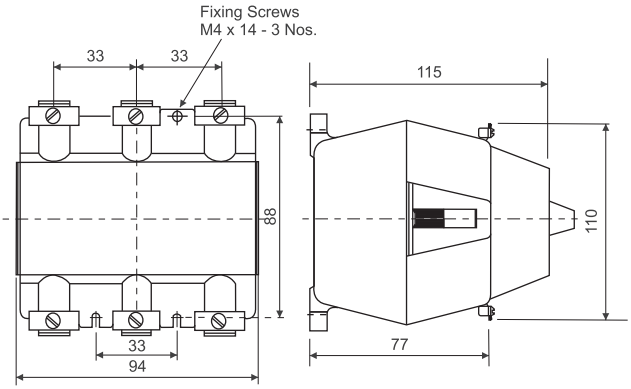

ML 6 Contactor

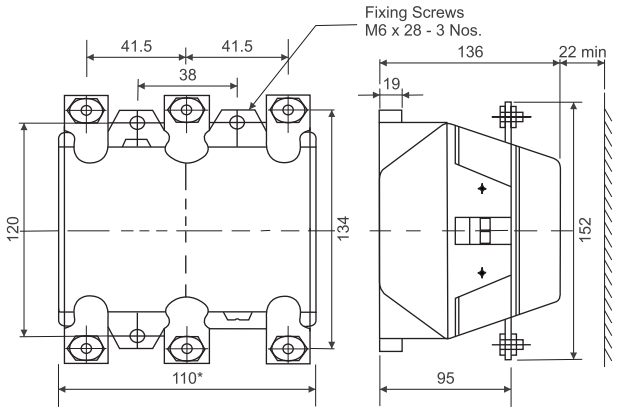

*Provide 12 mm extra for each Add-on block

ML 12 Contactor

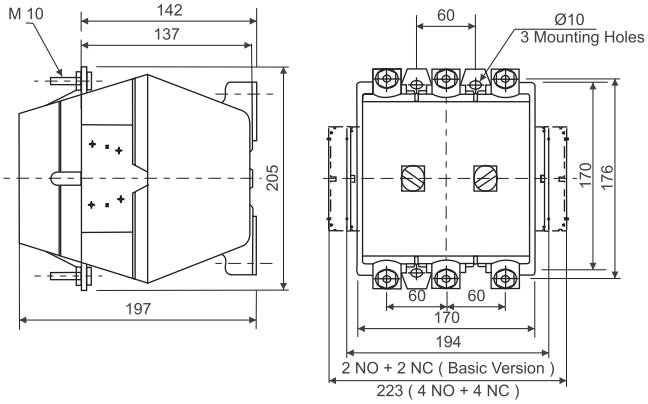

Thermal Overload Relay

ML 0/1/1.5

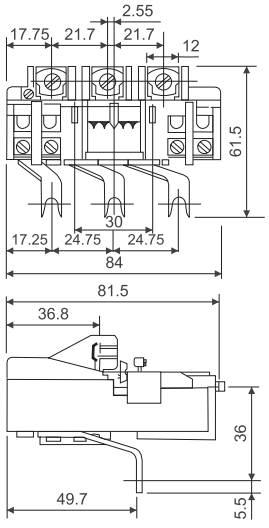

Terminal Screws M4

ML 2/3

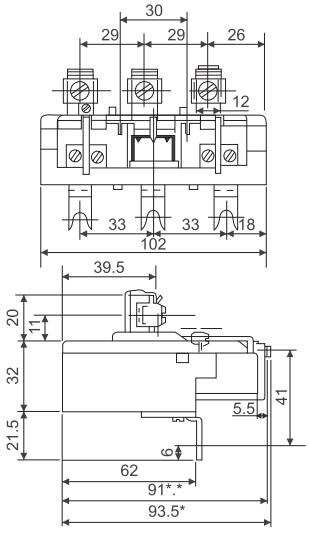

Terminal Screws M4

All dimensions in mm.

MX Mini Contactors & Thermal Overload Relay



MX Mini Contactors are designed for panels where panel space is a constraint. The contactors have a compact design and exhibit reliable performance even in smaller space. The range is suitable for both industrial and commercial applications for motor loads up to 5.5 kW and electromagnetic loads up to 4A.

Make Way For Bigger Benefits In Smaller Footprints



Technical Details - MX power Contactors



- Range from 6A - 12A AC3
- Control contactors available in all NO/NC combinations (4 Pole)
- Top mounting accessories
- Available with AC or DC control
- Built-in surge suppressor with DC control
- Direct mounting thermal overload relay type RX
- RoHS Compliant



Type Designation for AC / DC Control		Units	MX 6 AC / DC	MX 9 AC / DC	MX 12 AC / DC
Catalogue no. for AC control			CS94012 / 3	CS94014 / 5	CS94016 / 7
Catalogue no. for DC control			CS94021 / 2	CS94023 / 4	CS94025 / 6
Conformance to standards			IS/IEC 60947-4-1, IEC 60947-4-1, EN 60947-4-1		
Rated insulation voltage, U_i		V		690	
Service temperature		°C		-5°C to +55°C	
Degree of protection				IP20	
Tightening torque		Nm		0.8	
Power Contacts					
No. of main poles				3	
Conventional thermal current, I_{th}		A		20	
Rated current at 415 V, 50 Hz	Utilization category AC-1	A		20	
	Utilization category AC-3	A / kW	6 / 3	9 / 4	12 / 5.5
Making capacity at 415 V, 50 Hz		A		10 I_e (AC - 3)	
Breaking capacity at 415 V, 50 Hz		A		8 I_e (AC - 3)	
Short-circuit protection	gG fuse at 415 V, 50 Hz	A		20	
Electrical durability (AC-3)		million	1	0.8	0.6
Frequency of operation at U_c	Utilization category AC-1	cy / hr		3000	
	Utilization category AC-3	cy / hr		750	
Pollution degree				3	
Main terminal capacity	Solid conductors	mm^2		2 x 2.5	
	Multi-stranded conductors	mm^2		2 x 2.5	
Auxiliary Contacts					
No. of built-in auxiliary contact				1 NO or 1 NC	
Conventional thermal current, I_{th}		A		10	
Rated current at 415 V, 50 Hz	Utilization category AC-15	A		4	
Short-circuit protection	gG fuse at 415 V, 50 Hz	A		10	
Electrical durability (AC-15) at 415 V, 50 Hz		million		1.5	
Minimum non-overlapping distance		mm		0.5	
Maximum frequency of operation at U_c (AC-15)		cy / hr		1000	
Auxiliary terminal capacity	Solid conductors	mm^2		2 x 2.5	
	Multi-stranded conductors	mm^2		2 x 2.5	
Maximum Permissible control cable length for drop-off*	415 V AC	m		69.30	
	240 V AC	m		207.21	
	110 V AC	m		986.37	

CS94012 / 14 / 16 / 21 / 23 / 25 are 3 Main + 1NO auxiliary contact combination
CS94013 / 15 / 17 / 22 / 24 / 26 are 3 Main + 1NC auxiliary contact combination
*Cable capacitance assumed to be 0.2 microfarad/km

Technical Details - MX0 power Contactors

Technical Data





Type Designation for AC / DC Control		Units	MX 0 AC / DC				
Catalogue no. for AC control			CS94018	CS94019	CS94020	CS94041	CS94042
Catalogue no. for DC control			CS94027	CS94028	CS94029	CS94043	CS94044
Contact combination			40E	31E	22E	13E	04E
Conformance to standards			IS/IEC 60947-5-1, IEC 60947-5-1, EN 60947-5-1				
Rated insulation voltage, U_i		V	690				
Service temperature		°C	-5°C to +55°C				
Degree of protection			IP20				
Tightening torque		Nm	0.8				
Contacts							
No. of poles			4				
Contact details			4NO	3NO+1NC	2NO+2NC	1NO+3NC	4NC
Conventional thermal current, I_{th}		A	10				
Rated current at 415 V, 50 Hz	Utilisation category AC-15	A	4				
Short-circuit protection	gG fuse at 415 V, 50 Hz	A	10				
Electrical durability (AC-15) at 415 V, 50 Hz		million	1.5				
Minimum non-overlapping distance		mm	0.5				
Maximum frequency of operation at U_c for AC-15		cy / hr	1000				
Terminal capacity	Solid conductors	mm^2	2 x 2.5				
	Multi-stranded conductors	mm^2	2 x 2.5				
Control Circuit for Power Contactor & Contactor Relay							
Coil voltage			AC		DC		
Standard coil voltage U_c, at 50 Hz		V	24, 110, 240, 415		24, 110, 220		
Average consumption at U_c, 50 Hz	Pick-up	VA	26		2.8		
	Hold-on	VA	4.5		2.8		
		W	1.2		2.8		
Limits of operation	Pick-up	% U_c	80 - 110		80 - 110		
	Drop-off	% U_c	20 - 65		10 - 65		
Operating time at U_c, 50 Hz	Between coil energisation and: - Opening of NC contacts	ms	5 - 20		5 - 25		
	- Closing of NO contacts	ms	10 - 25		10 - 30		
	Between coil de-energisation and: - Opening of NO contacts	ms	10 - 25		10 - 30		
	- Closing of NC contacts	ms	15 - 30		15 - 35		
Mechanical durability		million	10		10		
Maximum frequency of operation at U_c		cy / hr	9000		9000		
Maximum Permissible control cable length for drop-off*	415 V AC	m	69.30				
	240 V AC	m	207.21				
	110 V AC	m	986.37				

Note :
1) 5NC and above combinations not recommended for DC control
2) 1NO + 3NC, 4NC add on block combinations are not recommended for DC control
For example, 4NO + 4NC combination can be achieved with 2NO + 2NC auxiliary contactor and 2NO + 2NC add on block and not with 4NO standalone contactor plus 4NC add on block
3) *Cable capacitance assumed to be 0.2 microfarad/km

Accessories Features

Auxiliary Contact Blocks



Type Designation		Units	MX-A1							
Catalogue no.			CS94030	CS94031	CS94032	CS94033	CS94034	CS94035	CS94036	CS94037
Contact combination			20E	11E	02E	40E	31E	22E	13E	04E
Conformance to standards			IS/IEC 60947-5-1, IEC 60947-5-1, EN 60947-5-1							
Rated insulation voltage, U_i		V	690							
Service temperature		°C	-5°C to +55°C							
Degree of protection			IP20							
Tightening torque		Nm	0.8							
Contacts										
No. of poles			2			4				
Contact details			2NO	1NO+1NC	2NC	4NO	3NO+1NC	2NO+2NC	1NO+3NC	4NC
Conventional thermal current, I_{th}		A	10							
Rated current at 415 V, 50 Hz Utilization category AC-15		A	3							
Short-circuit protectiong G fuse at 415 V, 50 Hz		A	10							
Electrical durability(AC-15)at 415V, 50Hz		million	1							
Minimum overlapping distance		mm	0.5							
Maximum frequency of operation at U_c for (AC-15)		cy / hr	1000							
Terminal capacity	Solid conductors	mm^2	2 x 2.5							
	Multi-stranded conductors	mm^2	2 x 2.5							

Mechanical Interlock



Type Designation	MX-M1
Catalogue no.	CS940380000

Surge Suppressor



Type Designation	MX-S1		
Catalogue no.	CS94039		
Suitable Coil Voltage at 50 Hz	24 - 48 V	110 - 240 V	360 - 415 V
Ordering Suffix	J000	B000	D000

Ordering Suffix for Coil Voltages

Std Coil Voltage at 50 Hz	24	42	48	110	220	240	360	380	415	440	525
Ordering Suffix - 50 Hz	G000	H000	J000	A000	K000	B000	C000	L000	D000	P000	M000
Ordering Suffix - 60 Hz	-	-	-	Y000	V000	-	-	-	S000	-	-

Coil Voltage V DC	24	48	110	220
Suffix	4000	5000	1000	2000

Thermal Overload Relay - Type RX

Technical Data



Type Designation		Units	RX	
Catalogue no.			ST94074	
Conformance to standards			**IS/IEC 60947-4-1& IEC 60947-4-1**	
Current range			Range (A)	Ordering Suffix
		A	0.23-0.41	OOFO
		A	0.45-0.78	OOJO
		A	0.78-1.2	OOLO
		A	1.2-1.9	OONO
		A	1.8-2.8	OOPO
		A	2.6-3.6	OOQO
		A	3.6-5.2	OOSO
		A	4.8-7	OOTO
		A	6.4-9.7	OOVO
		A	8.2-12.1	OOAO
Rated insulation voltage, U_i		V	690	
Rated impulse voltage, U_{imp}		kV	6	
Service temperature		°C	-5°C to +55°C	
Contacts				
Rated operational current for AC-15 utilisation category at 50 Hz for	24 V	A	6	
	110 V	A	5	
	220 V	A	3	
	380 / 415 V	A	2	
	500 V	A	2	
Tripping class		A	10	
Maximum frequency of operation		cy / hr	30	
Main terminal capacity (Lug)			10	
Auxiliary terminal capacity (Wires)		mm^2	2 x 2.5	
Mounting		mm^2	Direct	
OFF / Reset			1 OFF and Reset	
Built-incontacts			1NO and 1NC	

IT - Characteristics

Technical Data

Relay Selection Chart

Range (A)	Back-up fuse (HF) (A)	Contactor
0.23 - 0.41	2	MX 6
0.45 - 0.78	2	MX 6
0.78 - 1.2	2	MX 6
1.2 - 1.9	2	MX 6
1.8 - 2.8	4	MX 6
2.6 - 3.6	4	MX 6
3.6 - 5.2	6	MX 6
4.8 - 7	8	MX 9
6.4 - 9.7	10	MX 12
8.2 - 12.1	16	MX 12

Protection Characteristics

Single-phase

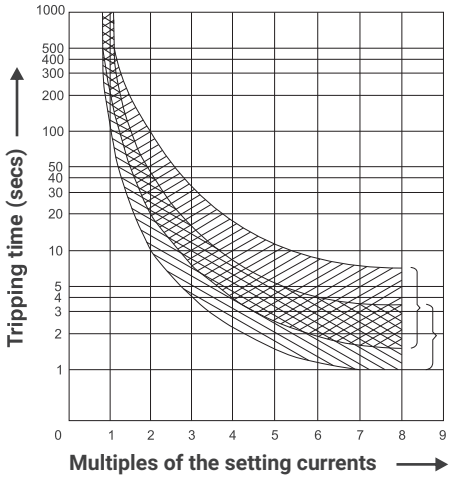

Three-phase

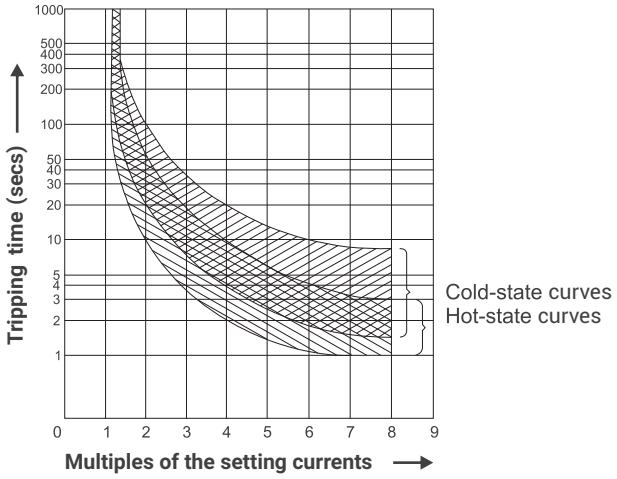

Overall Dimensions

Contact Travel Diagram

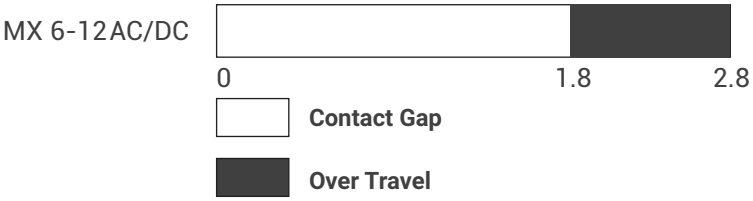

Dimension with Relay

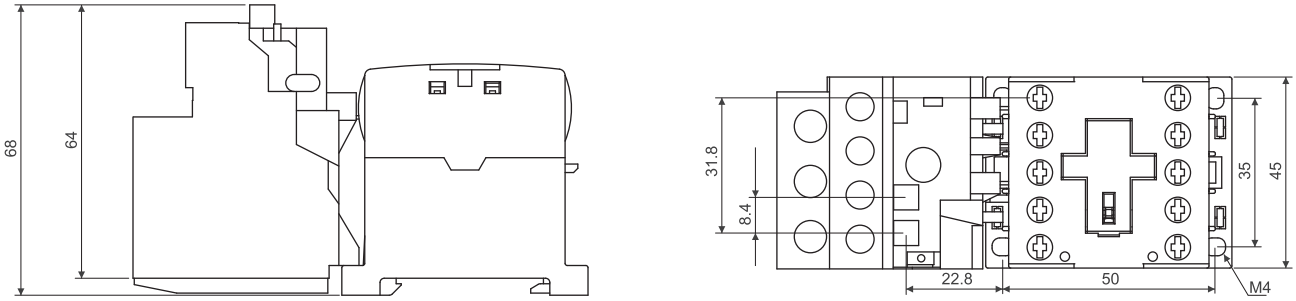

Dimension with MIL Kit

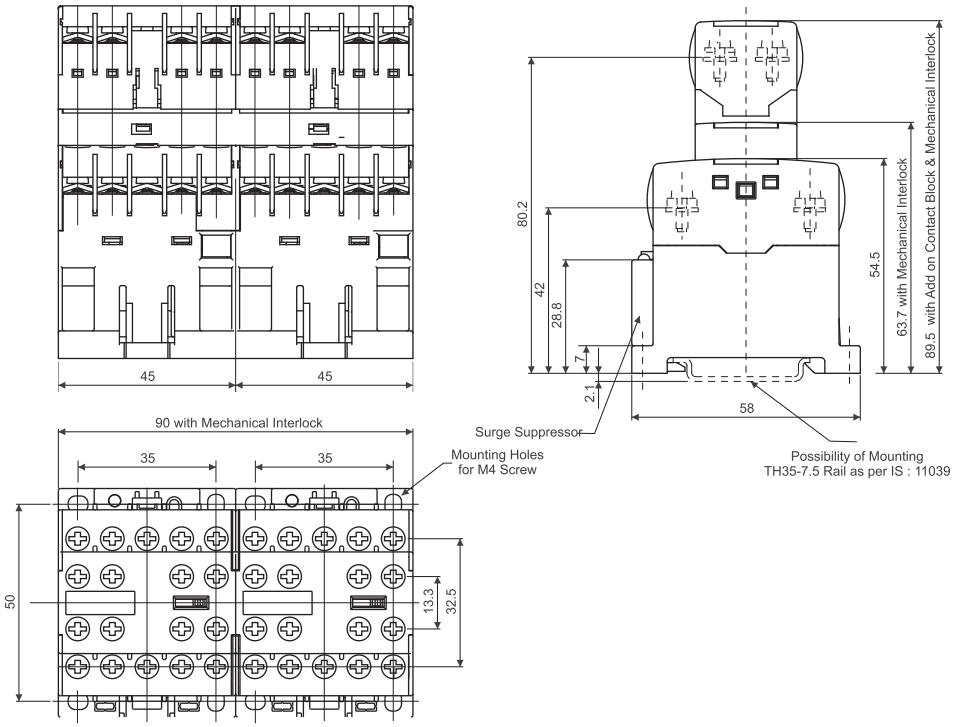

All dimensions in mm.





MCX 4 Pole Power Contactors

MCX range of 4 pole contactors is available from 16A to 800A AC-1. The contactors are widely used in conjunction with auto source transfer controller for transfer of power from mains to backup supply.

The Pathway to Smoother Changeovers



MCX Four Pole Contactors

4 Pole Contactors in DG Set

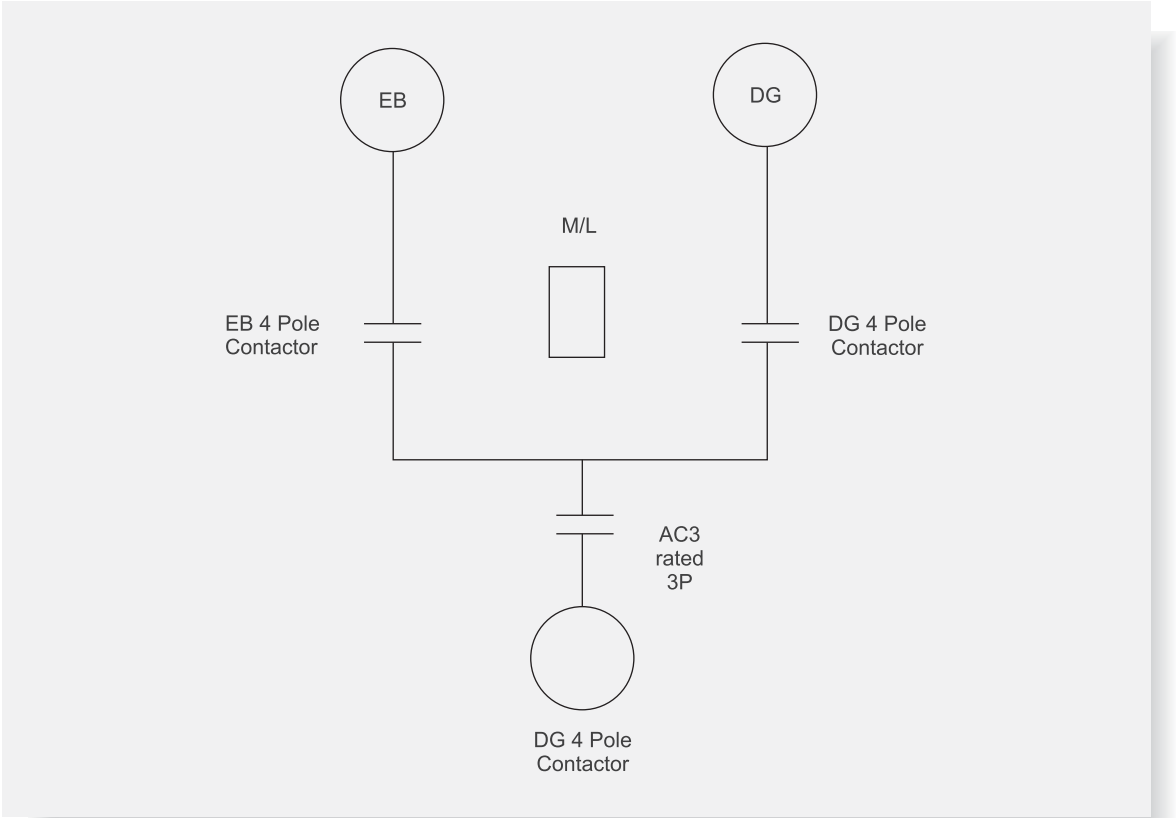

Load is powered by EB

- EB contactor will be energized
- DG set contactor will be switched off

EB supply fails

- EB Contactor will be automatically switched off
- DG set contactor will be actuated by DG set
- Power supply to load by DG set

*Both the contactors are electrically & mechanically interlocked
*Auxiliary NC contact will be used for actuation and NO for indication

MCX Four Pole Contactors



4 pole contactors used for DG set changeover applications are generally located upstream

Even if motor loads are connected down stream, the upstream 4 pole contactor will not be making the starting current of the motor

This starting current will have to be made by the downstream AC3 rated 3 pole contactor which will actually switch on he motor

Hence, 4 Pole contactors must always be selected as per their AC1 rating

Technical Details



› Range from 18-900A AC1
› Wide operating band upto 100A AC1
› Compact mechanical interlock arrangement upto 80A






Type		Unit	MCX 01	MCX 02	MCX 03	MCX 04
Catalogue no.			CS97009	CS97010	CS97011	CS97012
Conformance to standards						
Preferred DG ratings		kVA	7.5	15	20	25
Power contacts						
No. of poles			4	4	4	4
Number of built-inauxiliary contacts			-	-	-	-
Rated insulationvoltage, U_i		V	690	690	690	690
Rated operational voltage, U_e		V	415	415	415	415
Rated impulse withstandvoltage, U_{imp}		kV	8	8	8	8
Conventional thermal current, I_{th} / AC1 at 55°C / 60°C		**A**	**18**	**25**	**32**	**40**
Permissible short time ratings	1 Second	**A**	250	250	320	400
	10 Seconds	**A**	105	105	134	168
	15 Seconds	**A**	70	70	90	112
	1 Minute	**A**	60	60	77	96
	10 Minutes	**A**	30	30	38	48
	15 Minutes	**A**	25	26	34	42
Vibration resistance conformingto IEC 60068-2-6						
Ambient temperature around the device	Service temperature	°C				
	Storage temperature	°C				
Altitude withoutderation		m				
Degree of Pollution						
Degree of protection						
Protective treatment						
Watt loss per pole		W	1	1.1	2	3.1
Type of Terminal			Philip and Slot Head Combination Screw			
Maximum Main terminal capacity	Cable withLug	mm^2	1 x 6	1 x 6	1 x 6	1 x 6
	Busbar (withspreader)	mm^2	-	-	-	-
	Solid conductor		2 x 4	2 x 4	2 x 4	2 x 4
	Multistrand conductors	mm^2	2 x 2.5	2 x 2.5	2 x 2.5	2 x 2.5
Tightening Torque	MainPole Terminal	Nm	M3.5 / 1.1	M3.5 / 1.1	M3.5 / 1.1	M3.5 / 1.1
	Aux. Pole / Coil / Add on block Terminal	Nm	M3.5 / 1.1	M3.5 / 1.1	M3.5 / 1.1	M3.5 / 1.1

Technical Details


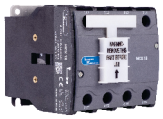
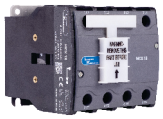



MCX 11	MCX 12	MCX 13	MCX 22	MCX 23
CS97013	CS97014	CS97015	CS97017	CS97018
IS/IEC 60947-4-1 & IEC 60947-4-1				
30	40	50	62.5	82.5
4	4	4	4	4
-	-	-	-	-
690	690	690	690	690
415	415	415	415	415
8	8	8	8	8
55	**63**	**80**	**105**	**130**
400	504	640	1000	1300
240	302	384	650	845
120	151	192	370	481
110	139	176	250	325
63	72	90	120	156
58	67	85	110	143
5..... 300 Hz : 3g				
-20°C to 60°C				
-40°C to 80°C			-15°C to 80°C	
3000				
3				
IP 20				
TH				
4.8	6.6	7	7.3	7.8
Slot Head Screw				
1 x 16	1 x 16	1 x 16	1 x 35	1 x 50
-	-	-	1 x (12.5 x 3)	1 x (12.5 x 3)
2 x 10	2 x 10	2 x 10	-	-
2 x 6	2 x 6	2 x 6	-	-
M5 / 2.4	M5 / 2.4	M5 / 2.4	M6 / 4.5	M6 / 4.5
M3.5 / 1.1	M3.5 / 1.1	M3.5 / 1.1	M3.5 / 1.1	M3.5 / 1.1

Technical Details



› Range from 18-900A AC1
› Wide operating band upto 100A AC1
› Compact mechanical interlock arrangement upto 80A






Type		Unit	MCX 01	MCX 02	MCX 03	MCX 04
Catalogue no.			CS97009	CS97010	CS97011	CS97012
Conformance to standards						
Auxiliary Contacts						
Endurance of auxiliary Contacts		million	0.5	0.5	0.5	0.5
AC-15 rating, 50 Hz	24-110 V	A	6	6	6	6
	220-440 V	A	4	4	4	4
	360-440 V	A	4	4	4	4
	525-600 V	A	1.2	1.2	1.2	1.2
DC-13 rating	24 V	A	6	6	6	6
	110-125 V	A	1.1	1.1	1.1	1.1
	250 V	A	0.55	0.55	0.55	0.55
	480 V	A	0.31	0.31	0.31	0.31
	500 V	A	0.27	0.27	0.27	0.27
	600 V	A	0.2	0.2	0.2	0.2
Auxiliary terminal capacity	Solid or multistrand conductors	mm^2	-	-	-	-
Operating time	Closing time	ms	10 - 12	10 - 12	10 - 12	10 - 12
	Opening time	ms	7 - 18	7 - 18	7 - 18	7 - 18
Coil						
Voltage available for 50/60 Hz operation, U_c		V	110, 220, 240, 415	110, 220, 240, 415	110, 220, 240, 415	110, 220, 240, 415
Pick-up	VA	VA	68	68	68	68
Hold-on	VA	VA	11	11	11	11
	Watts	W	4	4	4	4
Limits of operation	Pick-up	$\%U_c$	55 - 120	55 - 120	55 - 120	55 - 120
	Drop-off	$\%U_c$	30 - 50	30 - 50	30 - 50	30 - 50
Limits of operation with Electronic coil		V				
Safe isolation between coil and auxiliary contacts		V	400	400	400	400
Overall dimensions H x W x D		mm^3	83 x 45 x 83.7	83 x 45 x 83.7	83 x 45 x 83.7	83 x 45 x 83.7
Mounting dimensions H x W		mm^2	(60 - 65 - 70) x 35	(60 - 65 - 70) x 35	(60 - 65 - 70) x 35	(60 - 65 - 70) x 35
Mounting clearance (front)		mm	10	10	10	10
Weight		kg	0.35	0.35	0.35	0.35

Technical Details


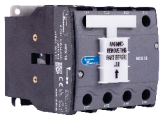
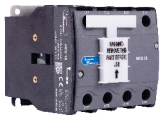



MCX 11	MCX 12	MCX 13	MCX 22	MCX 23
CS97013	CS97014	CS97015	CS97017	CS97018
IS/IEC 60947-4-1 & IEC 60947-4-1				
0.5	0.5	0.5	0.5	0.5
6	6	6	6	6
4	4	4	4	4
4	4	4	4	4
1.2	1.2	1.2	1.2	1.2
6	6	6	6	6
1.1	1.1	1.1	1.1	1.1
0.55	0.55	0.55	0.55	0.55
0.31	0.31	0.31	0.31	0.31
0.27	0.27	0.27	0.27	0.27
0.2	0.2	0.2	0.2	0.2
-	-	-	-	-
10 - 12	10 - 12	10 - 12	15 - 35	15 - 35
7 - 18	7 - 18	7 - 18	10 - 25	10 - 25
110/132,220/264, 240/288,415/500	110/132, 220/264, 240/288,415/500	110/132,220/264, 240/288,415/500	240/288,415/500	240/288,415/500
180	180	180	190	190
22	22	22	22	22
5	5	5	7.5	7.5
50 - 110	50 - 110	50 - 110	65 - 120	80 - 110
25 - 45	25 - 45	25 - 45	40 - 60	40 - 60
100 - 300	100 - 300	100 - 300	100 - 300	100 - 300
400	400	400	400	400
80 x 83.5 x 91.8	80 x 83.5 x 91.8	80 x 83.5 x 91.8	109 x 103 x 120.5	109 x 103 x 120.5
(55 - 58) x 70	(55 - 58) x 70	(55 - 58) x 70	80 x 85	80 x 85
10	10	10	10	10
0.8	0.8	0.8	1.3	1.3

Technical Details



› Range from 18-900A AC1
› Wide operating band upto 100A AC1
› Compact mechanical interlock arrangement upto 80A







Type		Unit	MCX 32	MCX 33	MCX 34
Catalogue no.			CS97020	CS97021	CS97022
Conformance to standards					
Preferred DG ratings		kVA	100	125	160
Power contacts					
No. of poles			4	4	4
Number of built-in auxiliary contacts			2 NO + 2 NC	2 NO + 2 NC	2 NO + 2 NC
Rated insulation voltage, U_i		V	1000	1000	1000
Rated operational voltage, U_e		V	415	415	415
Rated impulse withstand voltage, U_{imp}		kV	8	8	8
Conventional thermal current, I_{th}/Utilisation category AC1 at 55°C		**A**	**160**	**200**	**255**
Permissible short time ratings	1 Second	**A**	1320	1320	1683
	10 Seconds	**A**	880	1120	1428
	15 Seconds	**A**	500	500	638
	1 Minute	**A**	400	400	510
	10 Minutes	**A**	182	232	285
	15 Minutes	**A**	180	225	280
Vibration resistance conforming to IEC 60068-2-6					
Ambient temperature around the device	Service temperature	°C			
	Storage temperature	°C			
Altitude without deration		m			
Degree of Pollution					
Degree of protection					
Protective treatment					
Watt loss per pole		W	17	22	25
Type of Terminal					
Maximum Main terminal capacity	Cable with Lug	mm^2	1 x 120	1 x 120	1 x 120
	Busbar (with spreader)	mm^2	2 x (25 x 3)	2 x (25 x 3)	2 x (25 x 3)
	Solid conductor	mm^2	-	-	-
	Multistrand conductors	mm^2	-	-	-
Tightening Torque	Main Pole Terminal	mm^2	M8 / 11	M8 / 11	M10 / 14
	Aux. Pole / Coil / Add on block Terminal	mm^2	M3.5 / 1.1	M3.5 / 1.1	M3.5 / 1.1

Technical Details









MCX 41	MCX 42	MCX 43	MCX 44	MCX 45	MCX 46	MCX 47
CS97023	CS97024	CS97025	CS97026	CS97027	CS97028	CS94291
IS/IEC 60947-4-1 & IEC 60947-4-1						
200	225	250	320	380	437.5	500
4	4	4	4	4	4	4
2NO+2NC	2 NO + 2 NC	2 NO + 2 NC	2 NO + 2 NC	2 NO + 2 NC	2 NO + 2 NC	2 NO + 2 NC
1000	1000	1000	1000	1000	1000	1000
415	415	415	415	415	415	415
8	8	8	8	8	8	8
325	**360**	**400**	**560**	**600**	**700**	**900**
2500	2500	3500	4375	5250	6125	7000
1800	1800	2400	3000	3600	4200	6400
1200	1200	1500	1875	2250	2625	4500
1000	1000	1100	1375	1650	1925	3500
450	450	550	688	825	963	1400
400	400	500	625	750	875	1300
5..... 300 Hz : 3g						
-20°C to +60°C						
-15°C to 80°C						
3000						
3						
IP 20						
TH						
25	25	30	38	48	60	66
Hexagon Head Screw						
2 x 240	2 x 240	2 x 240	2 x 240	2 x 240	2 x 240	2 x 240
2x(50 x5)	2 x (50 x 5)	2 x (50 x 5)	2 x (50 x 5)	2 x (50 x 5)	2 x (50 x 5)	2 x (50 x 5)
-	-	-	-	-	-	-
-	-	-	-	-	-	-
M12 / 27	M12 / 27	M12 / 27	M12 / 27	M12 / 27	M12 / 27	M12 / 27
M3.5 / 1.1	M3.5 / 1.1	M3.5 / 1.1	M3.5 / 1.1	M3.5 / 1.1	M3.5 / 1.1	M3.5 / 1.1

Technical Details



› Range from 18-900A AC1
› Wide operating band upto 100A AC1
› Compact mechanical interlock arrangement upto 80A







Type		Unit	MCX 32	MCX 33	MCX 34
Catalogue no.			CS97020	CS97021	CS97022
Conformance to standards					
Auxiliary Contacts					
Endurance of auxiliary Contacts		million	0.5	0.5	0.5
AC-15 rating, 50 Hz	24-110 V	A	6	6	6
	220-440 V	A	4	4	4
	360-440 V	A	4	4	4
	525-600 V	A	1.2	1.2	1.2
DC-13 rating	24 V	A	6	6	6
	110-125 V	A	1.1	1.1	1.1
	250 V	A	0.55	0.55	0.55
	480 V	A	0.31	0.31	0.31
	500 V	A	0.27	0.27	0.27
	600 V	A	0.2	0.2	0.2
Auxiliary terminal capacity	Solid or multistrand conductors	mm^2	-	-	-
Operating time	Closing time	ms	20 - 40	20 - 40	20 - 40
	Opening time	ms	10 - 25	10 - 25	10 - 25
Coil					
Voltage available for 50/60Hz operation, U_c		V	110/132,240/288, 415/500	110/132,240/288, 415/500	110/132,240/288, 415/500
Pick-up	VA	VA	550	550	550
Hold-on	VA	VA	36	36	36
	Watts	W	10	10	10
Limits of operation	Pick-up (%U_c)	%U_c	80 - 110	80 - 110	80 - 110
	Drop-off (%U_c)	% U_c	35 - 65	35 - 65	35 - 65
Limits of operatio with Electronic coil as an accessory		V	100 - 300	100 - 300	100 - 300
Safe isolation between coil and auxiliary contacts		V	690	690	690
Overall dimensions H x W x D		mm^3	175 x 183.5 x 152	175 x 183.5 x 152	175x183.5x152
Mountingldimensions H x W		mm^2	115 x 165	115 x 165	115 x 165
Mounting clearance (front)		mm	10	10	10
Weight		kg	4.6	4.6	4.6

Technical Details









MCX 41	MCX 42	MCX 43	MCX 44	MCX 45	MCX 46	MCX 47
CS97023	CS97024	CS97025	CS97026	CS97027	CS97028	CS94291
IS/IEC 60947-4-1& IEC 60947-4-1						
0.5	0.5	0.5	0.5	0.5	0.5	0.5
6	6	6	6	6	6	6
4	4	4	4	4	4	4
4	4	4	4	4	4	4
1.2	1.2	1.2	1.2	1.2	1.2	1.2
6	6	6	6	6	6	6
1.1	1.1	1.1	1.1	1.1	1.1	1.1
0.55	0.55	0.55	0.55	0.55	0.55	0.55
0.31	0.31	0.31	0.31	0.31	0.31	0.31
0.27	0.27	0.27	0.27	0.27	0.27	0.27
0.2	0.2	0.2	0.2	0.2	0.2	0.2
2 x 2.5	2 x 2.5	2 x 2.5	2 x 2.5	2 x 2.5	2 x 2.5	2 x 2.5
20 - 45	20 - 45	20 - 45	20 - 45	40 - 70	40 - 70	40 - 70
10 - 25	10 - 25	10 - 25	10 - 25	30 - 60	30 - 60	30 - 60
110/132, 240/288, 415/500	110/132, 240/288, 415/500	110/132, 240/288, 415/500	110/132, 240/288, 415/500	110, 240, 415	110, 240, 415	110, 240, 415
2100	2100	2100	2100	1000	1000	1000
95	95	95	95	25	25	25
35	35	35	35	10	10	10
80 - 110	80 - 110	80 - 110	80 - 110	80 - 110	80 - 110	80 - 110
35 - 65	35 - 65	35 - 65	35 - 65	35 - 65	35 - 65	35 - 65
-	-	-	-	-	-	-
690	690	690	690	690	690	690
275x248x221	275 x 248 x 221	275 x 248 x 221	275 x 248 x 221	275 x 248 x 221	275 x 248 x 221	275 x 248 x 221
170 x 225	170 x 225	170 x 225	170 x 225	170 x 225	170 x 225	170 x 225
10	10	10	10	10	10	10
11.8	11.8	11.8	11.8	12.1	12.1	12.1

Ordering Information

Accessories for MCX

Add-on blocks



MNX / MCX
Top Add-on Block



MNX / MCX
Side Add-on Block

Mechanical Interlock Kit



MCX M3
(MCX 22)

Spares for MCX





MCX Spare Kits		Accessories					
			MCX 01 - 04	MCX 11 - 13	MCX 22 - 23	MCX 32 - 34	MCX 41 - 47
	Mounting	Configuration	Cat. No.	Cat. No.	Cat. No.	Cat. No.	Cat. No.
Add on Block	Top	4 NO	CS94112	CS94112	CS94112	-	-
		3 NO + 1 NC	CS94113	CS94113	CS94113	-	-
		2 NO + 2 NC	CS94114	CS94114	CS94114	-	-
		1 NO + 3 NC	CS94115	CS94115	CS94115	-	-
		4 NC	CS94116	CS94116	CS94116	-	-
		2 NO	CS94117	CS94117	CS94117	-	-
		1 NO + 1 NC	CS94118	CS94118	CS94118	-	-
		2 NC	CS94119	CS94119	CS94119	-	-
		1 NO	CS94120	CS94120	CS94120	-	-
		1 NC	CS94121	CS94121	CS94121	-	-
	First Left	1 NO + 1 NC	CS94220	CS94201	CS94201	CS94205	CS94205
	First Right	1 NO + 1 NC	CS94221	CS94202	CS94202	CS94206	CS94206
	Second Left	1 NO + 1 NC	-	CS94203	CS94203	CS94207	CS94207
	Second Right	1 NO + 1 NC	-	CS94204	CS94204	CS94208	CS94208
Mechanical Interlock Kit			CS94126	ST50540	CS93095	SS94992	CS94301
Surge Suppressors*			CS94166	CS94163	CS94163	CS94164	CS94165
Electronic coil module			-	CS92039	#	#	-

Spares		
Contactor	Spare Kits	Spare Coil *
MCX 01 - 04	-	CS94105
MCX 11	CS94077	CS94009
MCX 12	CS94078	
MCX 22	CS94331	ST91291
MCX 23	CS90078	
MCX 32	CS94082	CS94196
MCX 33	CS94083	
MCX 34	CS94084	
MCX 41	CS94295	CS94195
MCX 42	CS94296	
MCX 43	CS94297	
MCX 44	CS94298	
MCX 45	CS94299	CS94193
MCX 46	CS94300	
MCX 47	CS90308	

* Add 4 Digit Coil Suffix as per required voltage.
* Ordering suffix for Aux. contact & MIL Kit is OOOO.
# Available on demand. Contact nearest branch for more details.
Note: Mounting of side Add-on Aux. contact block is not recommended for mechanically interlocked MCX 11/12/13 Contactors.

Ordering Suffix for Coil Voltages

Standard Coil Voltage at 50/60 Hz	110	220	240	415
Ordering Suffix	AOOO	KOOO	BOOO	DOOO

Terminal Designation

MCX 01-04

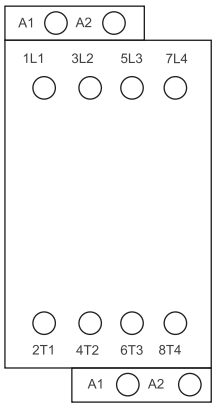

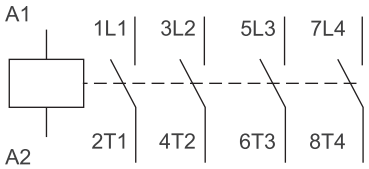

MCX 11-13

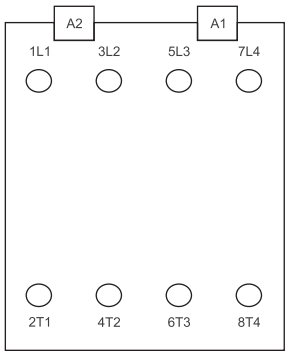

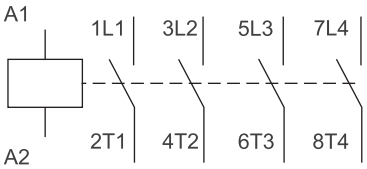

MCX 22-23

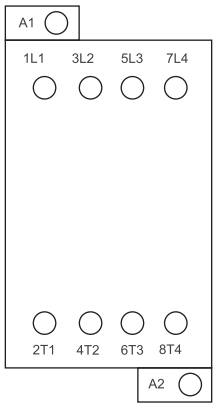

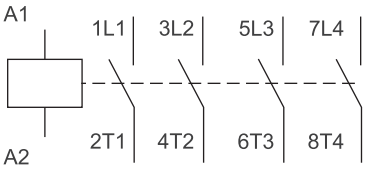

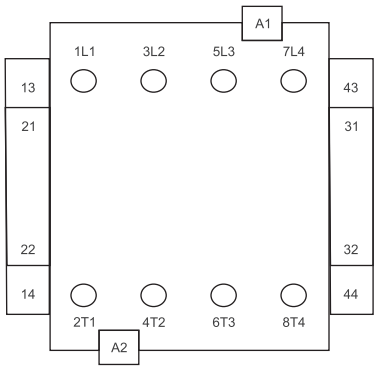

MCX 32-34/MCX 41-44

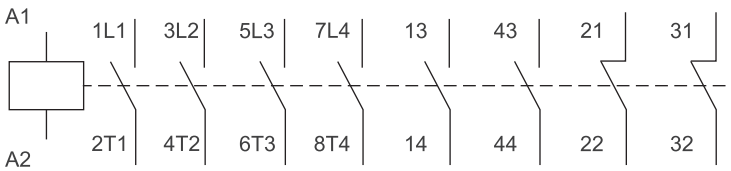

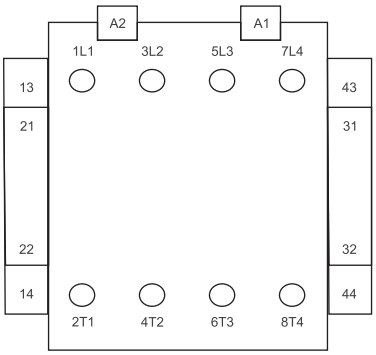

MCX 45-47

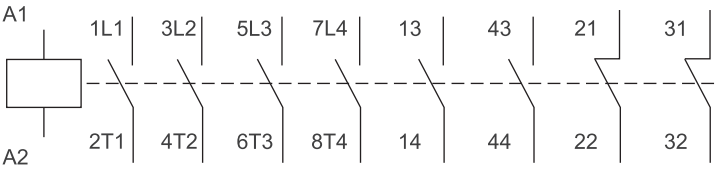

Contact Travel Diagram

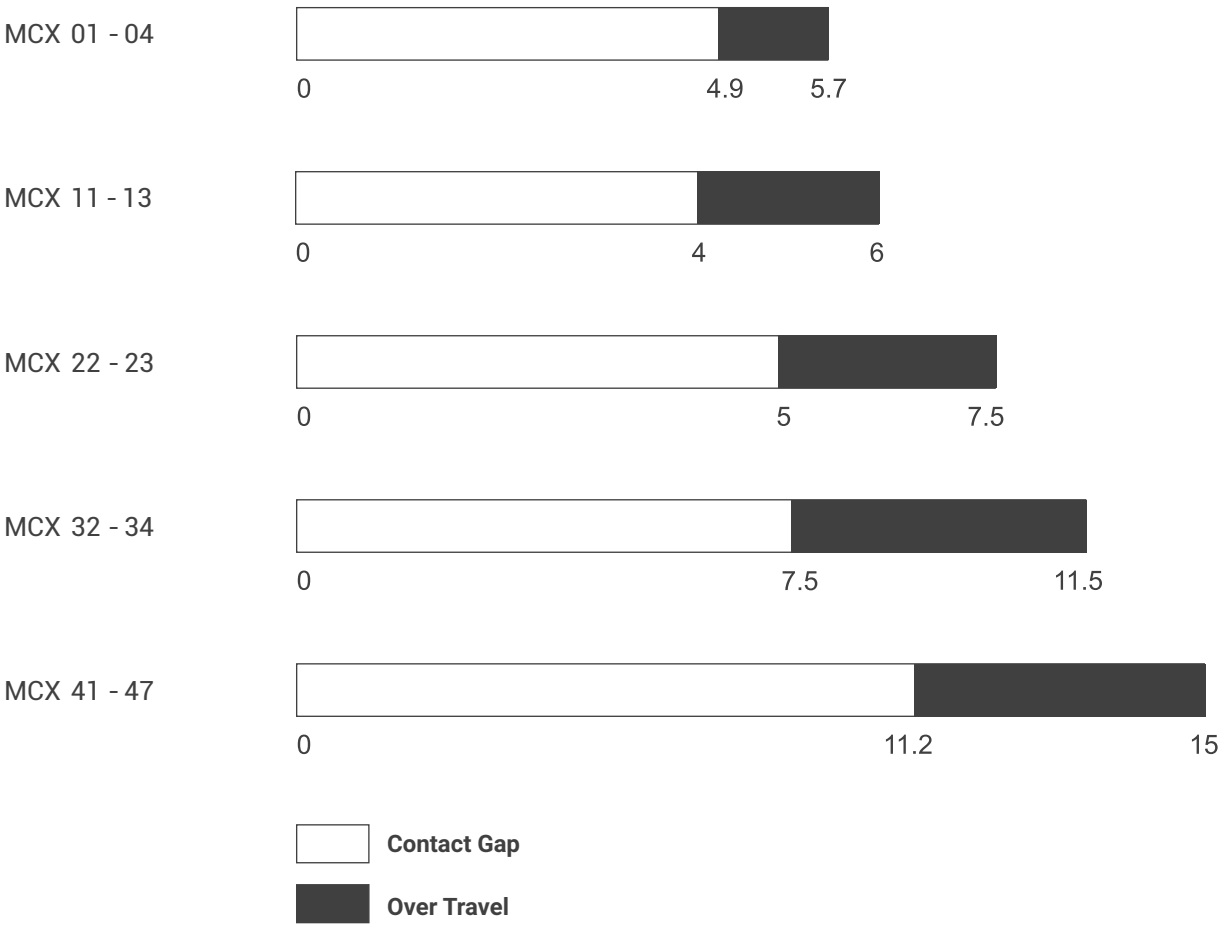

Overall Dimensions

MCX 01-04

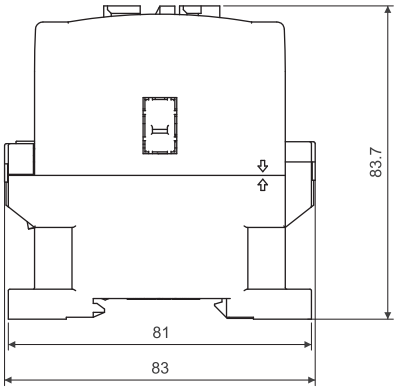

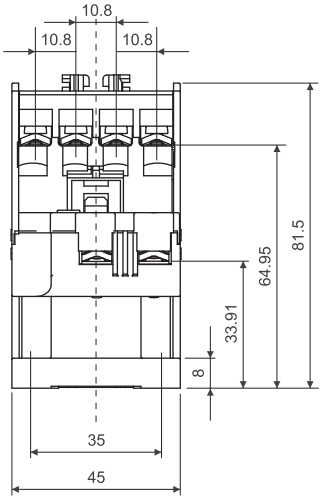

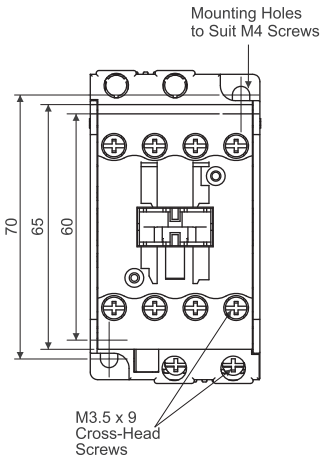

MCX 01-04 (with MIL Kit)

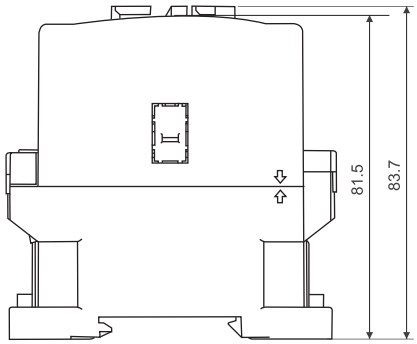

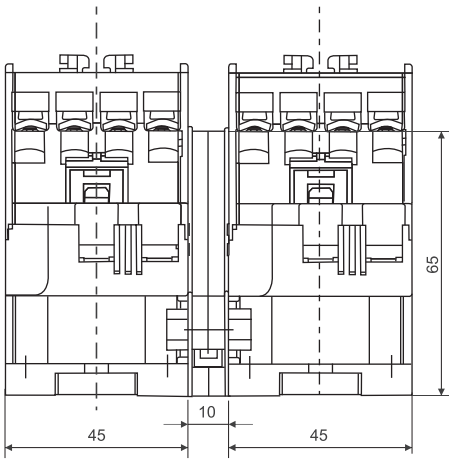

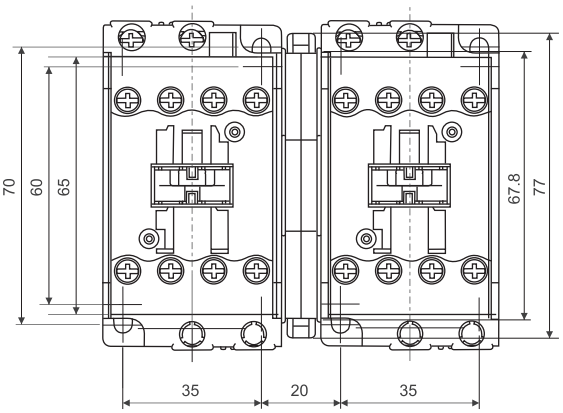

All dimensions in mm.

Overall Dimensions

MCX 11-13

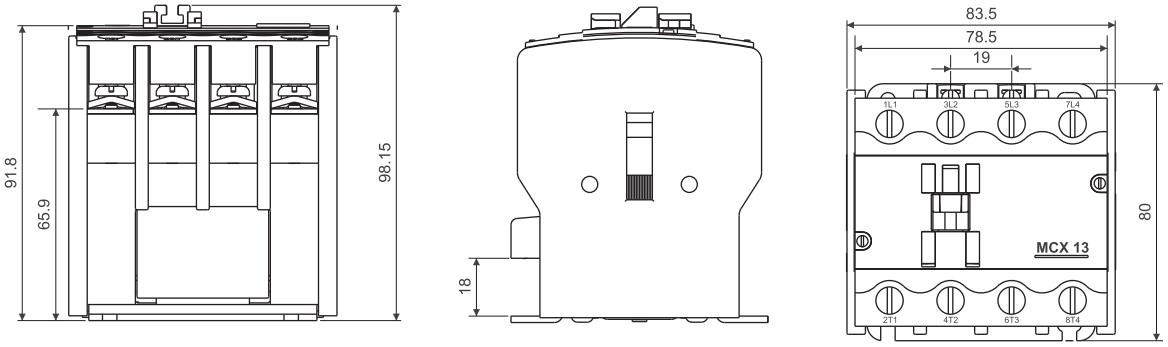

MCX 11-13 (with MIL Kit)

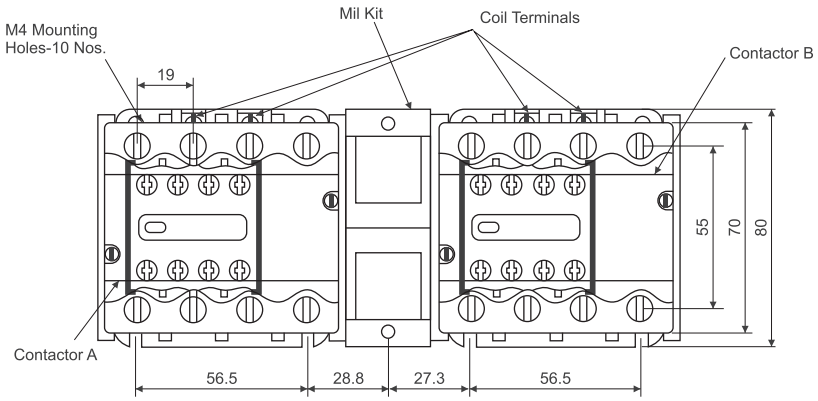

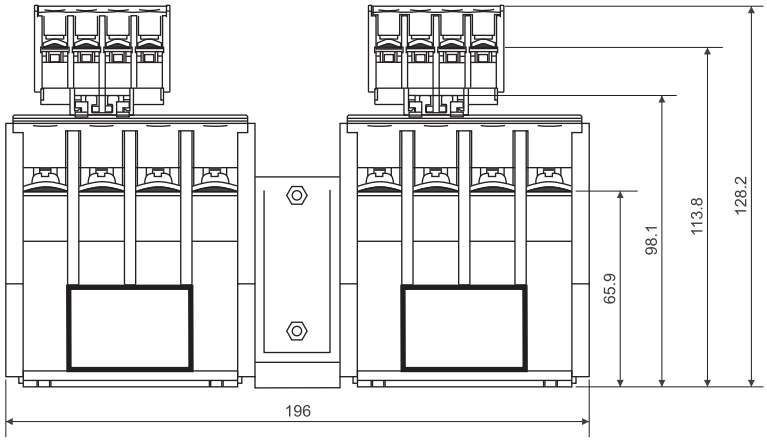

All dimensions in mm.

Overall Dimensions

MCX 22-23

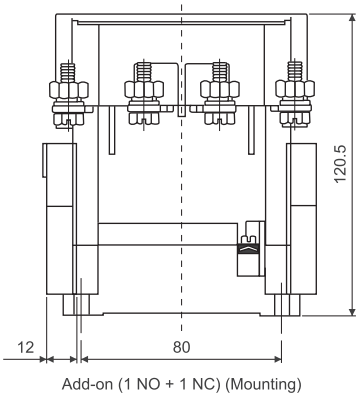

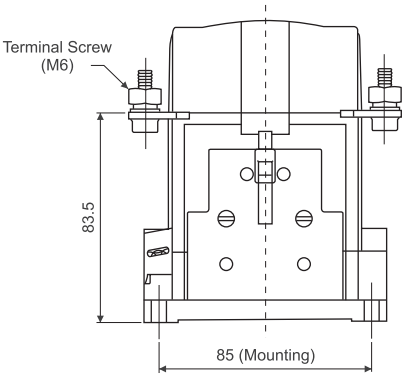

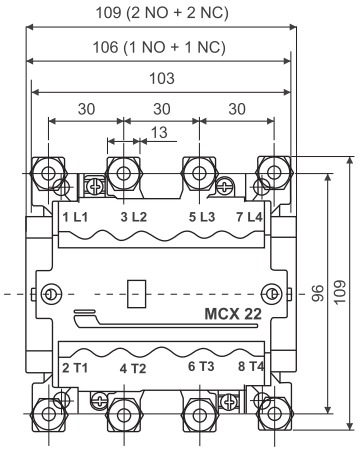

MCX 22-23 (with MIL Kit)

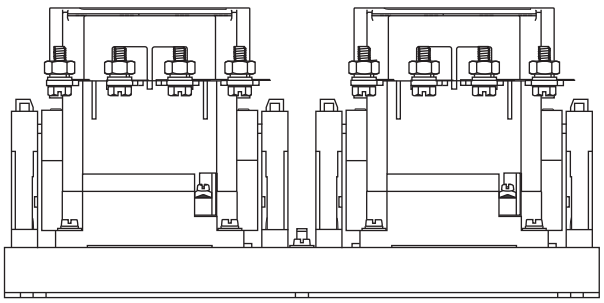

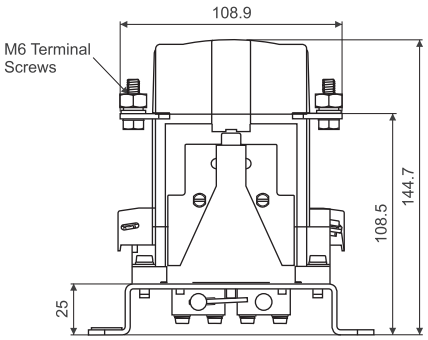

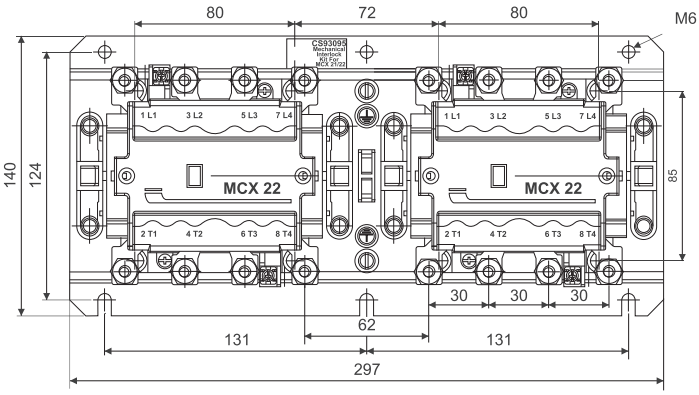

All dimensions in mm.

Overall Dimensions

MCX 32-34

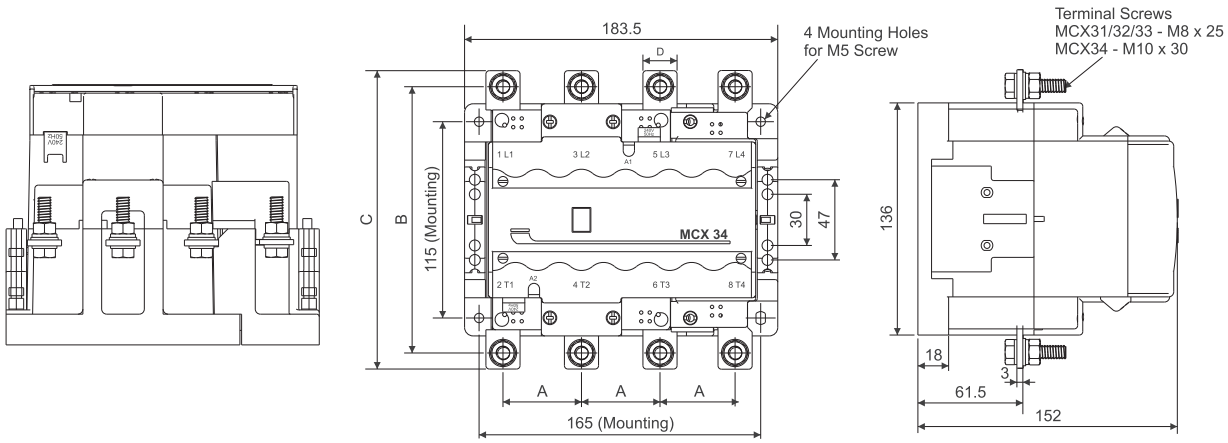

MCX 32-34 (with MIL Kit)

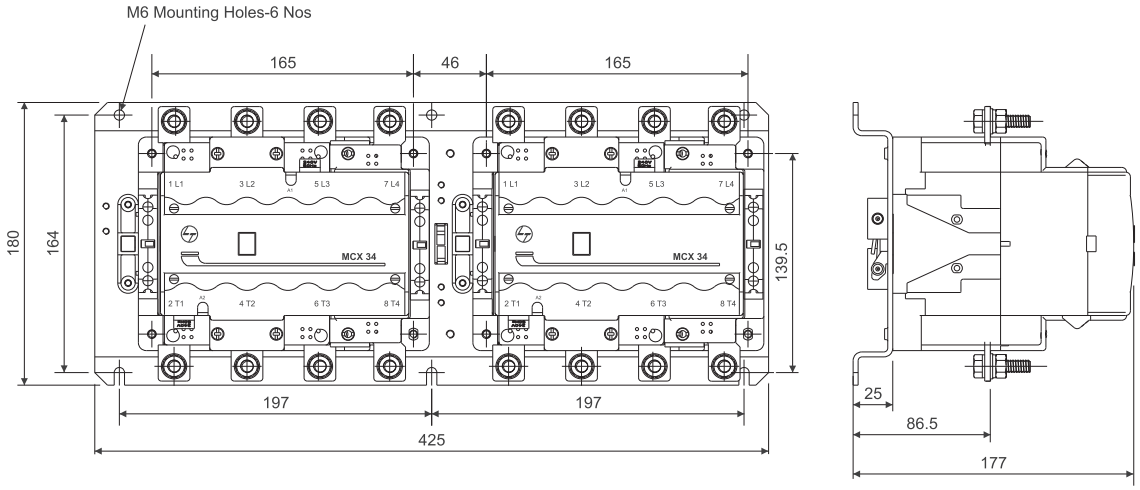

All dimensions in mm.

Overall Dimensions

MCX 41-47

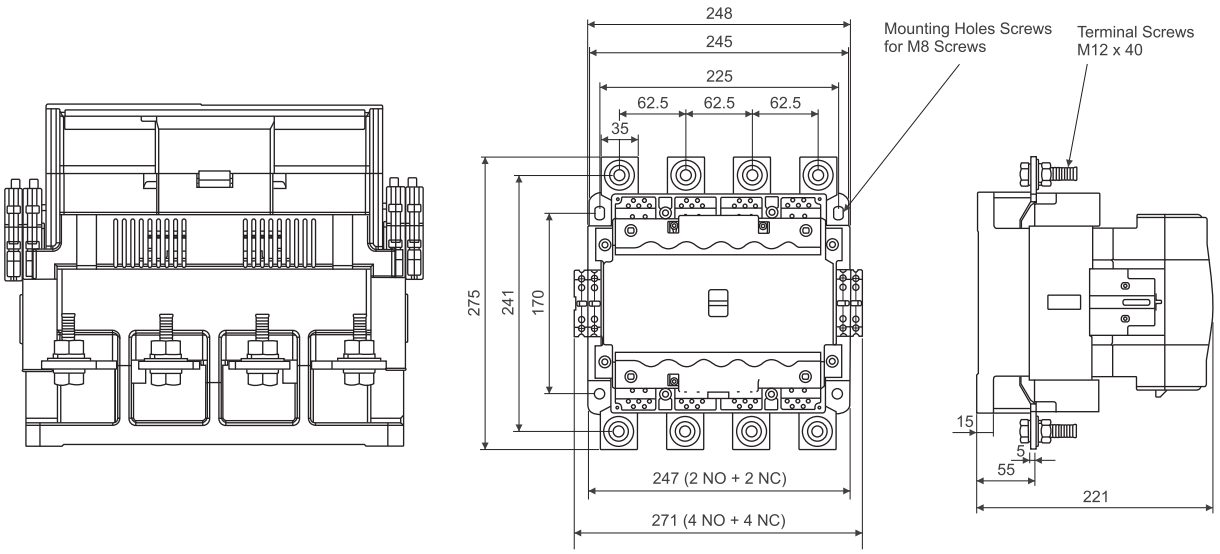

MCX 41-47 (with MIL Kit)

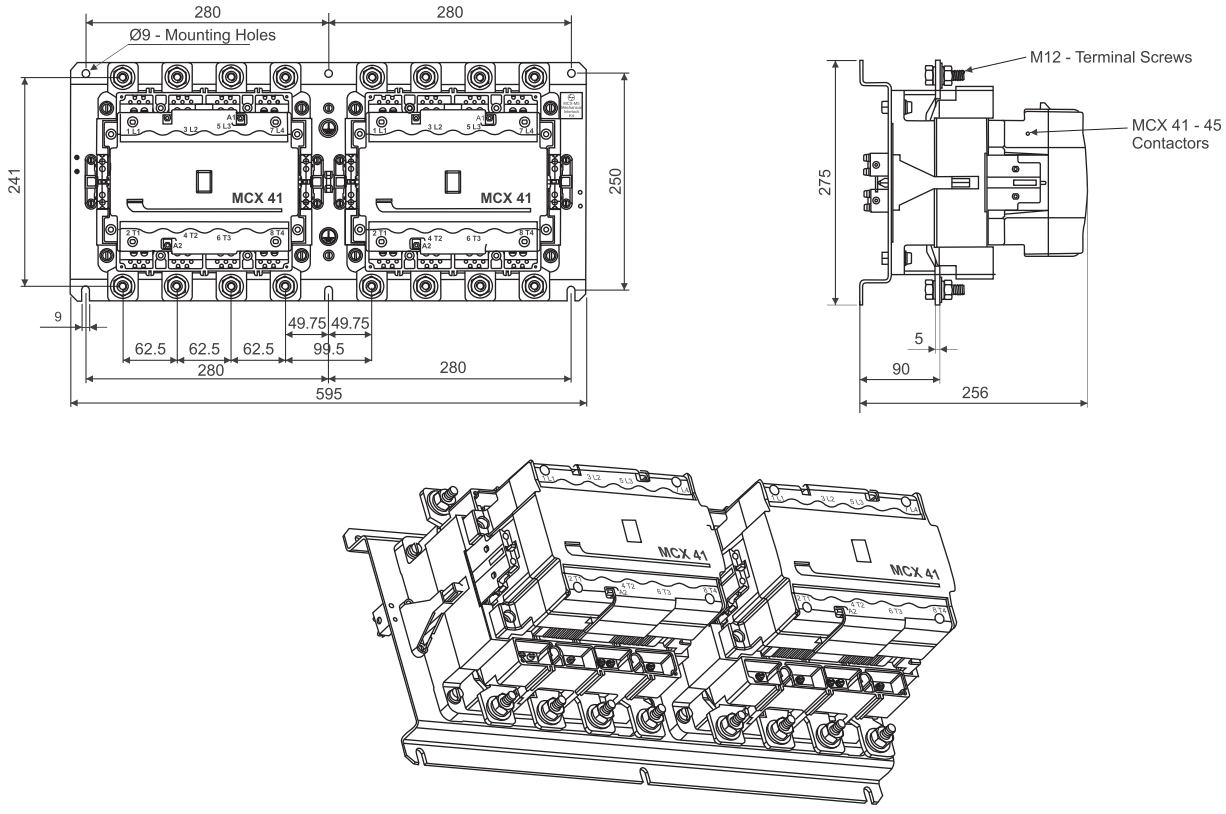

All dimensions in mm.



MO C Capacitor Duty Contactors

MO C Capacitor Duty Contactors are specially designed for capacitor switching applications. As capacitor switching is associated with high inrush current, the contactors are provided with damping resistors which limit the value of inrush current to a safe value. The contactors are used in APFC panels for switching power capacitors depending upon the amount of reactive power compensation required.

The Road To Higher Reliability

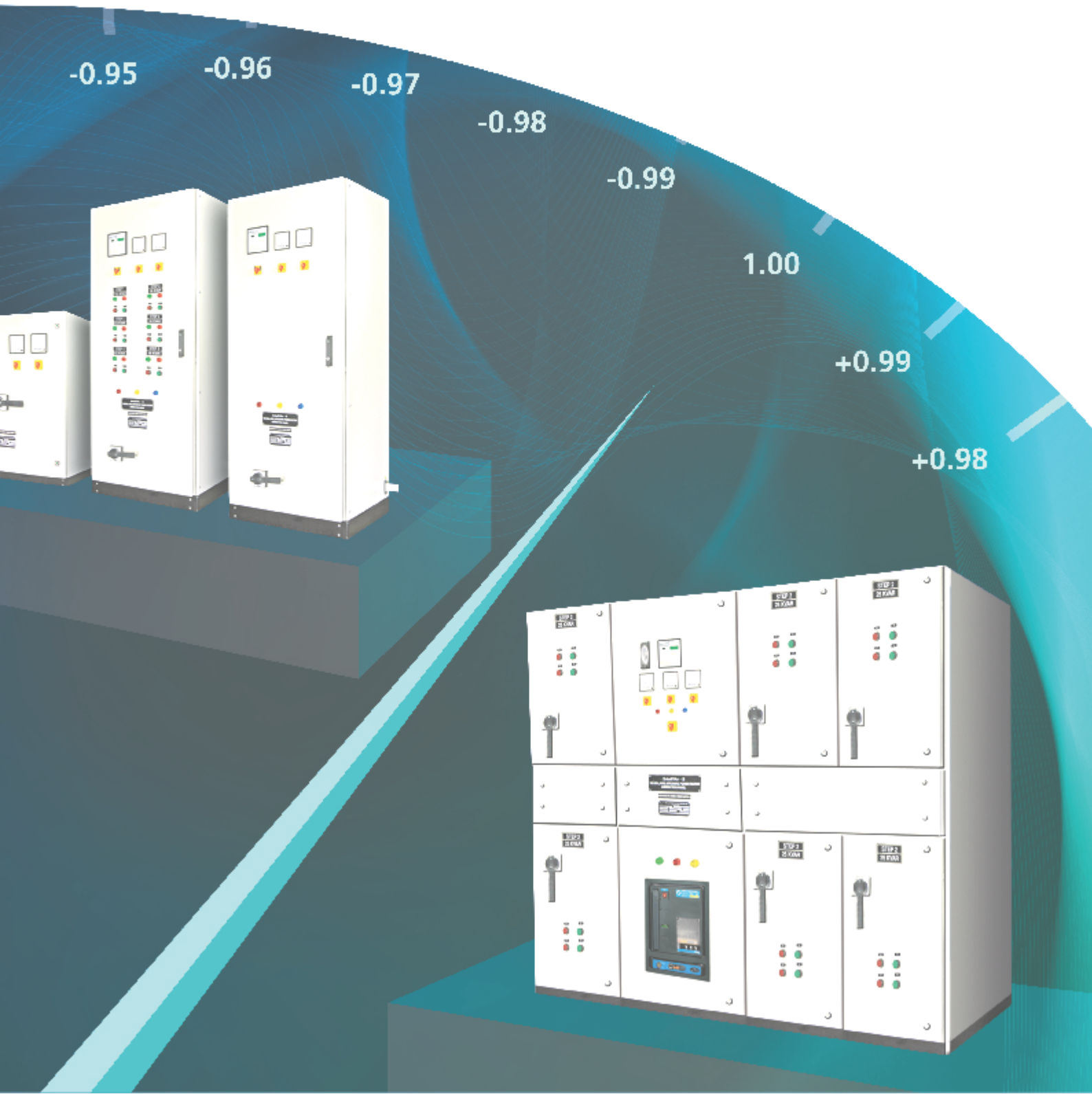

Capacitor Duty Contactors



In keeping with the mission to deliver the best, E&A understands the requirements of the RoHS directive. The directive restricts the use of hazardous substances inelectrical and electronic equipment and bans electrical equipment containing more than permitted levels of lead, cadmium, mercury, hexavalent chromium, polybro minated biphenyl (PBS) and polybrominated diphenyl ether (PBDE) flame retardants.

RoHS

Benefits of using MO C Contactors

Benefits of using Capacitor Duty Contactors

Since switching of capacitor banks involves high transient inrush currents, the size of the contactor required to switch these high currents becomes higher. Hence, current limiting inductors are used in series to attenuate this inrush current. This increases the system cost and panel space.

A typical case below illustrates the magnitude of transient inrush current for switching of a capacitor bank. For a 12.5 kVAr capacitor bank:

Rated current of 12.5 kVAr 440V Capacitor = 16.4A

Peak Inrush current without Damping Resistors = 1200A

Capacitor Duty Contactors are designed to limit this high transient inrush current by introducing damping resistors with early make auxiliary contacts. The current limiting due to damping resistors protects the APFC system from harmful effects of the capacitor charging inrush current.

Peak Inrush current with Damping Resistors = 260A.
It is observed that peak inrush current with damping resistors is one fifth of that without damping resistors.As the contactor is now required to switch the rated capacitor current, the size of the contactor required is smaller. Thus the system cost and panel space are significantly lower when Capacitor Duty Contactors are used.

MO C Capacitor Duty Contactors

MO C Capacitor Duty Contactors are designed for switching 3 phase, single or multi-step capacitor bank. In conventional capacitor switching contactors, early make auxiliary contacts used for insertion of damping resistors used to remain in the circuit continuously. During current breaking these auxiliary contacts would also carry and break the currents due to higher arc resistance in the main pole during arcing. This current breaking by auxiliary contacts at higher transient recovery voltage causes unreliable product performance and premature product failures.

MO C range of capacitor switching contactors have patented mechanism which disconnects the early make auxiliary contacts after the main contacts are closed. This completely eliminates the possibility of auxiliary contacts carrying and breaking the currents during breaking operation. This enhances the product switching performance and improves the product life.

Features and benefits of MO C ContactorsCapacitor Duty

Feature	Customer Benefits
De-latching auxiliary contacts	Improved switching performance
	Reduced losses in auxiliary contacts
Dual contact gap for auxiliary contacts	Higher electrical life
Encapsulated resistor assembly	Enhanced product safety
	No flash over between phases
Separate termination of damping resistors	Ease if wiring
	Enhanced operational reliability
Wide and chatter-free operating band	Improved switching performance
	Higher electrical life
	Higher product reliability

Contactors Duty Capacitor

MO C Contactors are available in 9 different ratings within 3 different frame sizes. All Contactors are available with AC coils with a large variety of voltage range for 50 or 60 Hz.

Contactor	Rated operational Current (AC-6b) at 440V, 50Hz	kVAr rating at 440 V
MO C 3	3.9	3
MO C 5	6.6	5
MO C 8.5	11.2	8.5
MO C 10	13.1	10
MO C 12.5	16.4	12.5
MO C 15	19.7	15
MO C 20	26.2	20
MO C 25	32.8	25
MO C 30	39.4	30
MO C 40	52.5	40
MO C 50	65.6	50
MO C 60	78.7	60
MO C 75	98.4	75
MO C 85	111.5	85
MO C100	131.2	100

Possible Reasons of damage of Capacitor Duty Contactor and how MOC addresses them

1.Damping resistors are intact but connection terminals are damaged.
This can happen if the damping resistors are disconnected from the system during switch on. The damage is due to the fact that the main terminals would have seen the entire inrush current as the damping resistors were disconnected and there was no current limiting. MOC addresses this by having separate connections for damping resistors which are crimped. Under no circumstances will the damping resistors become loose or disconnecting, thereby the main contacts will never see entire inrush current.

2.Burning of discharge resistors over a period of time due to overheating.
This happens if the damping resistors are continuously in circuit. If the capacitors are overloaded due to harmonics, high current will flow continuously through the damping resistors, thereby causing overheating. MOC addresses this by have resistor with de-latching operation. This means after the initial make operation, the resistors are disconnected from the system and only main contacts are present. Even if there is higher current due to capacitor overload, the resistors will not see that current as they are disconnected. There will be no damage to the main contacts too as they have a high thermal rating.

3.Burning of resistors due to chattering / continuous make-break.
The band of MO C Contactors coil is 75% - 110% of specified coil voltage. Voltage dips can be absorbed by MOC Contactors as they have a sufficiently high operating band. However, any rise or drop in control voltage beyond this can result in overloading or chattering.

Effect of Under-voltage on Capacitor Duty Contactor

MO C, capacitor duty contactor is designed such that the main contacts never carry the peak inrush current of the capacitor under normal condition. There is a de-latching mechanism in MO C contactor. latching mechanism for opening and closing of the damping resistor as sembly. This mechanism puts the resistor system in circuit for first few mili-seconds after the close command is given to contactor. Once the peak inrush current is passed, main contacts are closed and resistors are disconnected from the circuit. This can be understood with the timing diagram shown below in fig 1:

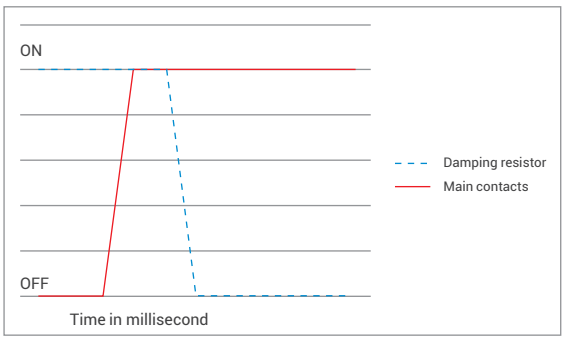

Timing diagram for de-latching and main contacts operation (For illustration purpose only)

But in case of under-voltage condition the electromagnetic force produced in the magnet system is not sufficient to close the magnet system completely, which may result in two scenarios:

1. Damping resistor contacts, which are early make contacts, get closed but the force is insufficient for closing main contacts and as a result de-latching does not occur.
2. Another scenario can be when the contactor starts chattering because of low voltage. And the latching contacts close and open again and again with a frequency higher than the recommended switching frequency. In both the cases resistors heat up because of repetitive passage of high current through them. This excessive heating can be as high as to burn the resistor block.

   Because of under-voltage, coil also draws current higher than its rated current. This damages the coil. Burnt or damaged coil again indicates the under-voltage. As discussed above that in case of under-voltage, electromagnetic force is not sufficient to close the main contacts. And there won't be any damage to main contacts. It can be inferred now that if capacitor duty contactor's resistor assembly is found burnt along with burnt coil and healthy main contacts, the contactor has failed because of under-voltage.

   Solution to protect the contactor from damage because of under-voltage:
   There can be two probable solutions to protect the contactor from under-voltage condition:-

1. Use APFC relays with under-voltage setting. Set the under-voltage at 75%. In case of under-voltage APFC relay will give trip command to incomer.
2. Use under voltage relay. Connect coil supply in series with NO contact of under voltage relay (non failsafe relay). When the relay gets healthy supply voltage, the normally open contacts close and only then will coil of the contactor gets supply through APFC relay output. In case of under-voltage this contact will open and coil supply will be withdrawn.

Technical Details

Technical Specification

- Available for capacitor range from 3 - 100 kVAr
- Modular design saving precious panel space
- De-Latching auxiliary contacts
- Separate termination of damping resistors
- Encapsulated resistor assembly ensuring safety
- Lug as well as Lugless termination





Type Designation			Units	MO C3	MO C5	MO C8.5
kVAr Rating (at System voltage 440V)#			kVAr	3	5	9
Catalogue No.		Built in Aux Contacts	1 NO/ 1NC	CS96146	CS96127	CS96320
Conformance to Standards						
Rated Operational Current at 440 V, 50 / 60 Hz (AC-1)		I_e	A	10	10	25
Rated Operational Current at 440 V, 50 / 60 Hz (AC-6b)		I_e	A	3.9	6.6	11.2
Short Circuit Protection						
Max. Operational Voltage		U_e	V	690	690	690
Rated insulation Voltage		U_i	V	1000	1000	1000
Rated Impulse Withstand Voltage		U_{imp}	kV	8	8	8
Degree of Protection						
Main Terminal Capacity No. of cable x (Max.Range - Min.Range)	Cable with Ferrule type Lug		mm			
	Cable with Pin type Lug		mm			
	Cable with Fork type Lug		mm			
	Cable with Ring type Lug		mm			
	Solid Conductor		mm^2	2 x 10	2 x 10	2 x 10
	Stranded Conductor		mm^2	2 x 6	2 x 6	2 x 6
	Finely Stranded Conductor		mm^2	2 x 6	2 x 6	2 x 6
Coil Operating Band	Pick-up		V	65 - 110	65 - 110	65 - 110
	Drop-off	% U_c	V	35 - 65	35 - 65	35 - 65
Coil Consumption	Pick-up	% U_c	VA	77	77	77
	Hold-on		VA	9	9	9
			W	3	3	3
Life (Operating Cycles)		Mechanical	Million	10	10	10
		Electrical	Million	0.2	0.2	0.2
Max. Operating Frequency		Operations / Hr		240	240	240
Operating Sequence	Making					
	Breaking					
Overall Dimensions	Height	H	mm	87	87	87
	Width	W	mm	45	45	45
	Depth	D	mm	133.5	133.5	133.5
	Mounting Dimensions		mm	35x60-65-70	35x60-65-70	35x60-65-70
Wattloss per pole			W	0.03	0.08	0.2
Weight			kg	0.52	0.52	0.52

Note: Contact replacement is not permitted in MO C contactors
* Accessories and Spares same as that of MO contactor.
** With spreader link
# kVAr ratings should be selected as per the net kVAr of the capacitor reactor combination irrespective of capacitor voltage (440V/480V/525V)
# While selection it should be ensured that current rating of capacitor is less than the current through the contactor
$ Use spreader while using 16 sq.mm cable
$$ Terminal capacity mentioned is with spreader

Technical Details








MO C10	MO C12.5	MO C15	MO C20	MO C25	MO C30**
10	13	15	20	25	30
CS96156	CS96321	CS90019	CS90021	CS96322	CS96148**
IS/IEC 60947-4-1,IEC 60947-4-1,EN 60947-4-1					
25	40	40	50	50	55
13.1	16.4	19.7	26.2	32.8	39.4
gG type fuses rated at 1.5-2 Ie					
690	690	690	690	690	690
1000	1000	1000	1000	1000	1000
8	8	8	8	8	8
IP20					
1 x (4-10)					-
1 x (4-10)					-
1 x (4-10), For width 12.4 mm Max.					-
-					2x16 max lug palm width 12mm
2 x 10	2 x 10	2 x 10	2 x 10	2 x 10$	-
2 x 6	2 x 6	2 x 6	2 x 6	2 x 6$	-
2 x 6	2 x 6	2 x 6	2 x 6	2 x 6$	2 x16$$
65 - 110	65 - 110	65 - 110	65 - 110	65 - 110	65 - 110
35 - 65	35 - 65	35 - 65	35 - 65	35 - 65	35 - 65
77	77	77	77	77	77
9	9	9	9	9	9
3	3	3	3	3	3
10	10	10	10	10	10
0.2	0.2	0.2	0.2	0.2	0.2
240	240	240	240	240	240
Early Make / Main					
Main Contacts Break					
87	87	87	87	87	115**
45	45	45	45	45	56**
133.5	133.5	133.5	133.5	133.5	133.5**
35x60-65-70	35x60-65-70	35x60-65-70	35x60-65-70	35x60-65-70	35x60-65-70
0.3	0.5	0.7	1.3	2.0	2.9
0.52	0.52	0.52	0.52	0.52	0.56**

Technical Details

Technical Specification

› Available for capacitor range from 3 - 100 kVAr
› Modular design saving precious panel space
› De-Latching auxiliary contacts
› Separate termination of damping resistors
› Encapsulated resistor assembly ensuring safety
› Lug as well as Lugless termination





Type Designation			Units	MO C40	MO C50	MO C60
kVAr Rating (at System voltage 440 V)#			kVAr	40	50	60
Catalogue No.		Built in Aux Contacts	1 NO/ 1NC	CS96147	CS96324	CS96149
Conformance to Standards						
Rated Operational Current at 440 V, 50 / 60 Hz (AC-1)		I_e	A	80	90	100
Rated Operational Current at 440 V, 50 / 60 Hz (AC-6b)		I_e	A	52.5	65.6	78.7
Short Circuit Protection						
Max. Operational Voltage		U_e	V	690	690	690
Rated insulation Voltage		U_i	V	1000	1000	1000
Rated Impulse Withstand Voltage		U_{imp}	kV	8	8	8
Degree of Protection						
Main Terminal Capacity No. of cable x (Max.Range - Min.Range)	Cable with Ferrule type Lug		mm	1 x (25-35), 2 x (16-25)		-
	Cable with Pin type Lug		mm	1 x (25-35), 2 x (16-25)		-
	Cable with Fork type Lug		mm	-		-
	Cable with Ring type Lug		mm	-		2 x 50 max lug palm width 12mm
	Solid Conductor		mm^2	-	-	-
	Stranded Conductor		mm^2	2 x (10-35)	2 x (10-35)	2 x 35$
	Finely Stranded Conductor		mm^2	2 x (10-35)	2 x (10-35)	2 x 35$
Coil Operating Band	Pick-up		V	75 - 110	75 - 110	75-110
	Drop-off	% U_c	V	35 - 65	35 - 65	35 - 65
Coil Consumption	Pick-up	% U_c	VA	144	144	144
	Hold-on		VA	15	15	15
			W	6	6	6
Life (Operating Cycles)		Mechanical	Million	10	10	10
		Electrical	Million	0.2	0.2	0.2
Max. Operating Frequency		Operations / Hr		240	240	240
Operating Sequence	Making					
	Breaking					
Overall Dimensions	Height	H	mm	123.5	123.5	174**
	Width	W	mm	55	55	73**
	Depth	D	mm	163	163	163**
	Mounting Dimensions		mm	45x100-105	45x100-105	45x100-105
Watt loss per pole			W	4.1	6.4	9.2
Weight			kg	1.15	1.15	1.32**

Note: Contact replacement is not permitted in MO C contactors

* Accessories and Spares same as that of MO contactor.
** With spreader link
# kVAr ratings should be selected as per the net kVAr of the capacitor reactor combination irrespective of capacitor voltage (440V/480V/525V)
# While selection it should be ensured that current rating of capacitor is less than the current through the contactor
$ Use spreader while using 16 sq.mm cable
$$ Terminal capacity mentioned is with spreader

Technical Details





MO C75	MO C85	MO C100
75	85	100
CS96150	CS96160	CS96158
IS/IEC 60947-4-1,IEC 60947-4-1,EN 60947-4-1		
140	140	180
98.4	111.5	130
gG type fuses rated at 1.5-2 Ie		
690	690	690
1000	1000	1000
8	8	8
IP20		
1 x (50-70), 2 x (25-35)		-
1 x (50-70), 2 x (25-35)		-
-		-
-		2 x 95 max lug palm width 25mm
-	-	-
2 x (16-70)	2 x (16-70)	-
2 x (16-70)	2 x (16-70)	-
75 - 110	75 - 110	75 - 110
35 - 65	35 - 65	35 - 65
240	240	240
25	25	25
9	9	9
10	10	10
0.2	0.2	0.2
240	240	240
Early Make / Main		
Main Contacts Break		
135	135	195**
70	70	95**
175	175	175**
60x115-120	60x115-120	60x115-120
9.4	12.1	12.1
1.72	1.72	1.9**

Ordering Information

Salient Features & Benefits

Product Designation	kVAr Rating @ 440V 50Hz	In Built Aux contacts	Cat. No.*
MO C3	3	1 NO/1 NC	CS96146/CS96151
MO C5	5	1 NO/1 NC	CS96127/CS96128
MO C8.5	8.5	1 NO/1 NC	CS96320/CS96337
MO C10	10	1 NO/1 NC	CS96156/CS96159
MO C12.5	12.5	1 NO/1 NC	CS96321/CS96338
MO C15	15	1 NO/1 NC	CS90019/CS90020
MO C20	20	1 NO/1 NC	CS90021/CS90022
MO C25	25	1 NO/1 NC	CS96322/CS96339
MO C30	30	1 NO/1 NC	CS96148/CS96153
MO C40	40	1 NO/1 NC	CS96147/CS96152
MO C50	50	1 NO/1 NC	CS96324/CS96341
MO C60	60	1 NO/1 NC	CS96149/CS96154
MO C75	75	1 NO/1 NC	CS96150/CS96155
MO C85	85	1 NO/1 NC	CS96157/CS96160
MO C100	100	1 NO/1 NC	CS96158/CS96161

*Add four digit suffix as per coil voltage

Accessories & Spares

Add on Blocks

Mounting Position	Contacts	Cat. No.
First Left	1 NO + 1 NC	CS945800000
First Right	1 NO + 1 NC	CS945810000
Second Left	1 NO + 1 NC	CS945820000
Second Right	1 NO + 1 NC	CS945830000

Spare Coils

For Contactor	Cat. No.
MO C3 - C30	CS96317
MO C40 - 60	CS96318
MO C75 - 100	CS96319

* Add four digit suffix as per coil voltage

MO C Spreader Link Kit

For Contactor	Cat. No.
MO C3-30	CS942740000
MO C40-60	CS940930000
MO C75-100	CS940940000



Note:1) Spreader Link Kit consists of six moulded links and four phase barriers

Ordering Suffix for Coil Voltages

Std Coil Voltage	110	220	240	415
Ordering Suffix - 50 / 60 Hz	A000	K000	B000	D000

Overall Dimensions

Surge Suppressor

Suitable for Contactors	Suitable for coil voltage	Cat. No.
MO Frame - 0/1 MO0 Control MO C Frame - 1	110V, AC	CS91706AOOO
	220-320V, AC	CS91706BOOO
	360-415V, AC	CS91706DOOO
MO Frame - 2 MO C Frame - 2	110V, AC	CS91707AOOO
	220-320V, AC	CS91707BOOO
	360-415V, AC	CS91707DOOO
MO Frame - 3 MO C Frame - 3	110V, AC	CS91708AOOO
	220-320V, AC	CS91708BOOO
	360-415V, AC	CS91708DOOO
MO Frame - 4/5	24-110V, AC	CS91854AOOO
	220-240V, AC	CS91854BOOO
	360-525V, AC	CS91854DOOO

All dimensions in mm.

Ordering Information

MO C

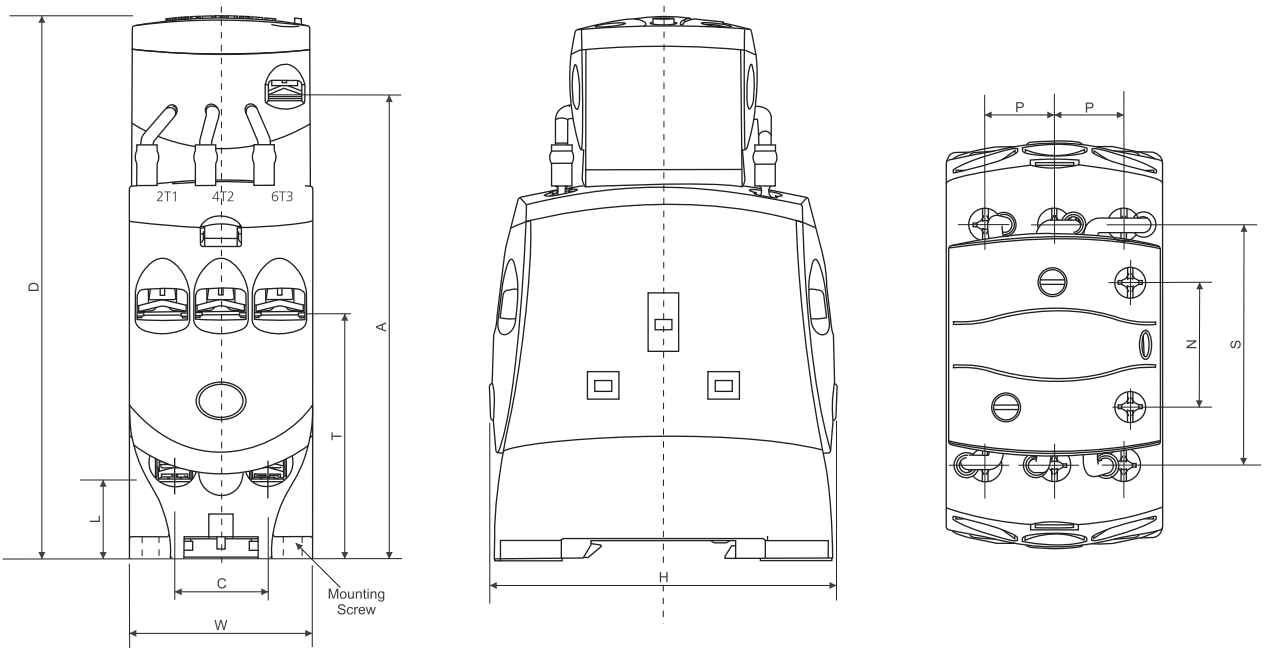

Label	MO C		
	3 - 25	40 - 50	75 - 85
W	45	55	70
D	133.5	163	175
H	87	123.5	135
N	26	26	26
T	60	68	68
C	22.8	27	35
L	19.6	29.5	30
S	50	82	93
P	14.4	18	23
A	113	142	154

MO C Frame 1 (with spreader links) / MO C 30

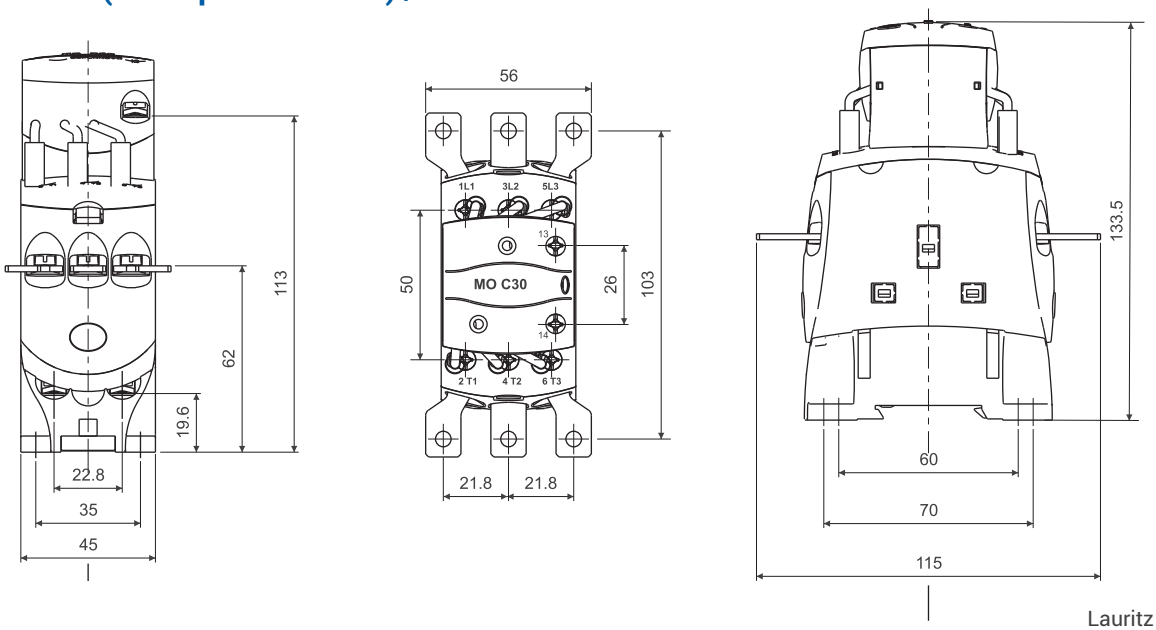

Overall Dimensions

MO C Frame 2 (with spreader links) / MO C 60

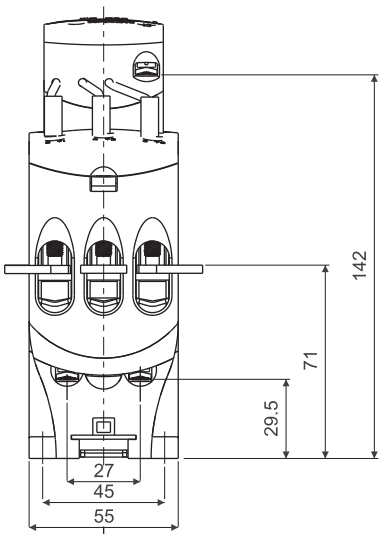

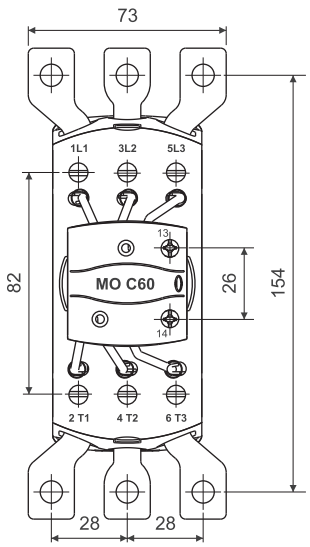

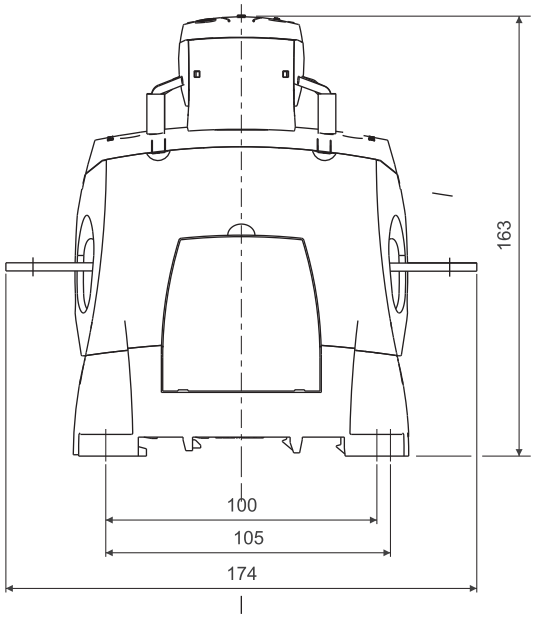

MO C Frame 3 (with spreader links) / MO C 100

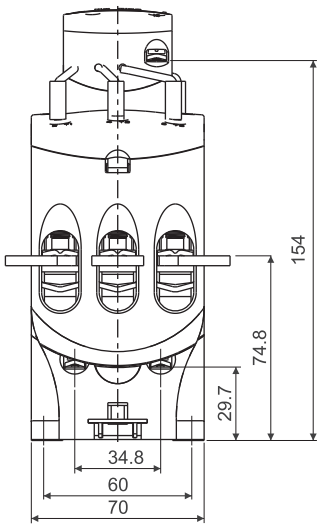

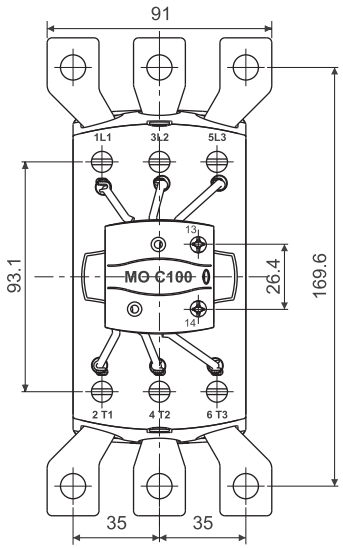

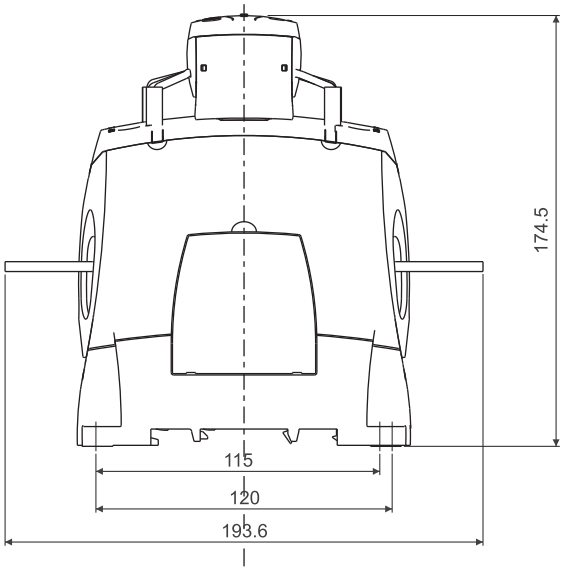

MO0 Auxiliary Contactors



MO0 control contactors are basic 4 pole contactor. These contactors can be used for building control logics. With addon blocks these contactor can give you a maximum 8 auxiliary contact (6 NC and above combination is not allowed). We have MO0 DC basic four pole contactor relays. The no. of contacts can be extended upto 8 NO to 4 NC. These contactor are suitable for industrial as well as commercial installations where complex control is required.

The Master Key To Every Control Requirement



Terminal Details MO0 AC

Salient Features & Benefits

- Compact dimensions saving precious panel space
- In-built surge supressor with the coil
- DIN Rail mounting facility
- Lug as well as Lugless termination
- RoHS compliant



Contact Combination	4 NO	3 NO + 1 NC	2 NO + 2 NC
Type	MO 0 40E	MO 0 31E	MO 0 22E
AC Control	CS91623	CS91624	CS91625

Type		Units	MO0 AC
Conformance to standards			IS/IEC 60947-5-1IEC 60947-5-1EN 60947-5-1
No. of poles			4
Ratedinsulation voltage (U_i)		V	1000
Rated operation voltage (U_e)	AC-15		690 V AC
	DC-13		220 V DC
Ratedimpulse withstand voltage		kV	8
Thermal current (I_{th}) @ 55°C		A	10
Rated operational current (I_e)	AC-15	A	2A at 690 V AC
		A	4A at 415 V AC
		A	10A at 240 V AC
	DC-13	A	0.3A at 220 V DC
		A	0.6A at 110 V DC
Mechanical life		million	10
Electricalife(AC-15Duty)@ 415V @ 4A		million	1
Max. frequencyof operations (op. cycle/hr)	Mechanical	cy / hr	7200
	AC-15	cy / hr	1200
	DC-13	cy / hr	1200
Terminal capacity	Solid conductor	mm^2	2 x 4
	Stranded conductor	mm^2	2 x 2.5
	Pin type lug	mm^2	2 x 2.5
	Fork type lug	mm^2	1 x 2.5
Coil			
Rated coil voltages (Uc)	50 Hz / 60Hz	V	24, 110, 220, 240, 415
Consumption	Pick up	VA	68
	Hold on	VA	9
Operating limits %Uc	Hold on	W	2.8
	Pick-up	%Uc	65 - 110
	Drop-off	%Uc	30 - 55
Overall dimension H X W X D		mm	86.5 x 45 x 89

Terminal Details MO0 AC

Add-on auxiliary contact block



MO Top Add-on Block

Spares

Description	Cat. No.
Spare Coil	CS94841*

* Add 4 digit suffix as per required coil voltage given below.

Type designation	Mounting Position	Contacts	Terminal Marking	Cat. Nos.
MO-SA	Top Mounted Single Pole	1 NO	53 - 54	CS945850OOO
MO-SA	Top Mounted Single Pole	1 NC	51 - 52	CS945860OOO
MO-TA1	Top Mounted Two Pole	2 NO	53 - 54, 63 - 64	CS945910OOO
MO-TA2	Top Mounted Two Pole	1 NO + 1 NC	53 - 54, 61 - 62	CS945920OOO
MO-TA2	Top Mounted Two Pole	2 NC	51 - 52, 61 - 62	CS945930OOO
MO-TA4	Top Mounted Four Pole	4 NO	53 - 54, 63 - 64, 73 - 74, 83 - 84	CS945940OOO
MO-TA4	Top Mounted Four Pole	3 NO + 1 NC	53 - 54, 63 - 64, 73 - 74, 81 - 82	CS945950OOO
MO-TA4	Top Mounted Four Pole	2 NO + NC	53 - 54, 63 - 64, 71 - 72, 81 - 82	CS945960OOO
MO-TA4	Top Mounted Four Pole	1 NO + 3 NC	53 - 54, 61 - 62, 71 - 72, 81 - 82	CS945970OOO
MO-TA4	Top Mounted Four Pole	4 NC	51 - 52, 61 - 62, 71 - 72, 81 - 82	CS945980OOO

Ordering Suffix for Coil Voltages

Std Coil Voltage at 50 Hz	24	110	220	240	415
Ordering Suffix	GOOO	AOOO	KOOO	BOOO	DOOO

Terminal Details MO0 AC

- Compact dimensions saving precious panel space
- In-built surge suppressor with coil
- DIN rail mounting facility
- Lug as well as lugless termination
- Rohs Complaint



Contact Combination	4 NO	3 NO + 1 NC	2 NO + 2 NC
Type	MO 0 DC 40E	MO 0 DC 31E	MO 0 DC 22E
DC Control	CS90045	Cs90046	Cs90047

Parameters		Units	MO0 DC
Conformance to standards			IS/IEC 60947-5-1
No of Poles			4
Rated Insulation Voltage (Ui)		V	1000
Rated operational Voltage (Ue)	AC-15	V	690 V AC
	DC-13	V	220 V DC
Rated Impulse withstand Voltage		kV	8
Thermal current (Ith) @ 45°C		A	10
Rated Operational Current (Ie)	AC-15	A	2A at 690 V AC
			4A at 415 V AC
			10A at 240 V AC
	DC-13	A	0.3A at 220 V DC
			0.6A at 110 V DC
Mechanical Life		Million	10
Electrical Life (AC-15 Duty) @415V @4A		Million	1
Max. frequency of operations (op.cycle/hr)	Mechanical	Cycle/Hours	7200
	Electrical	Cycle/Hours	1200
Terminal capacity	Solid	mm^2	2 x 4
	Stranded	mm^2	2 x 2.5
	Pin type Lug	mm^2	2 x 2.5
	Fork type Lug	mm^2	1 x 2.5
Coil			
Rated coil voltage (Uc)		V	24, 110, 220, 480 V DC
Consumption	Hold On	W	5.4
Operating Limits % Uc	Pick Up	%Uc	70 - 120
	Drop off	%Uc	60 - 10
Overall Dimensions (H x W x D)		mm	83.5 x 45 x 111

Ordering Suffix for Coil Voltages

Coil Voltage V DC	24	48	110	220
Suffix	4000	5000	1000	2000

Terminal Designation

2NO + 2NC

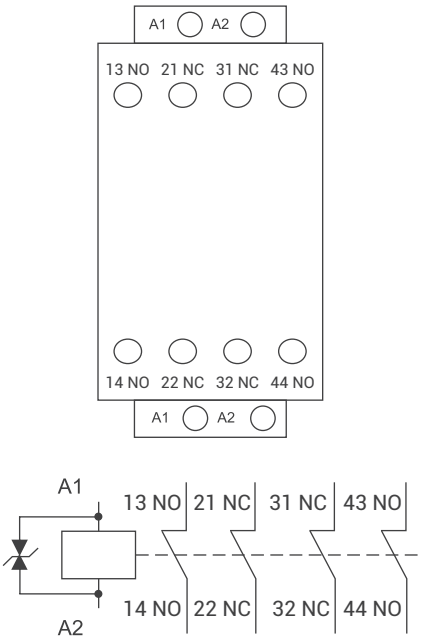

3 NO + 1 NC

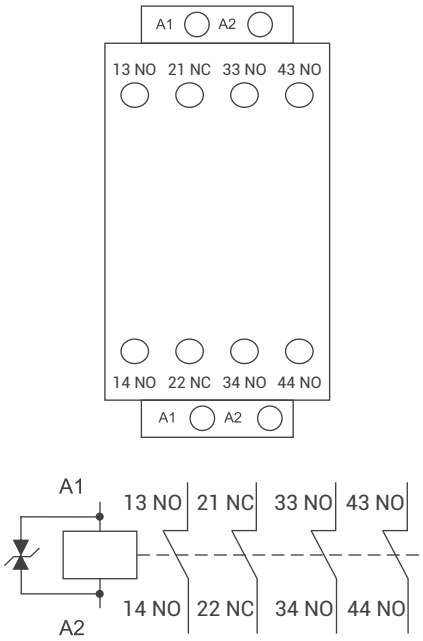

4 NO

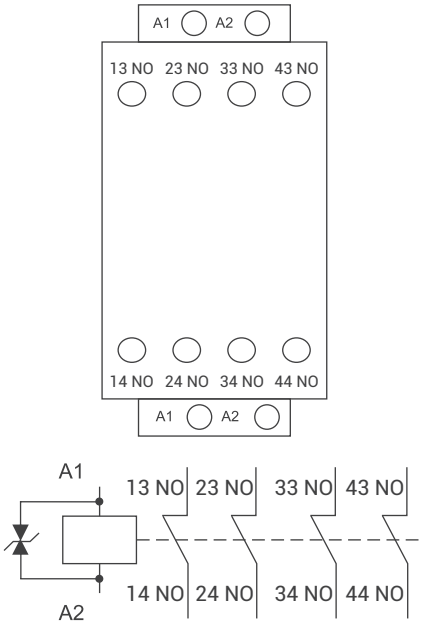

Overall Dimensions

MO0 AC

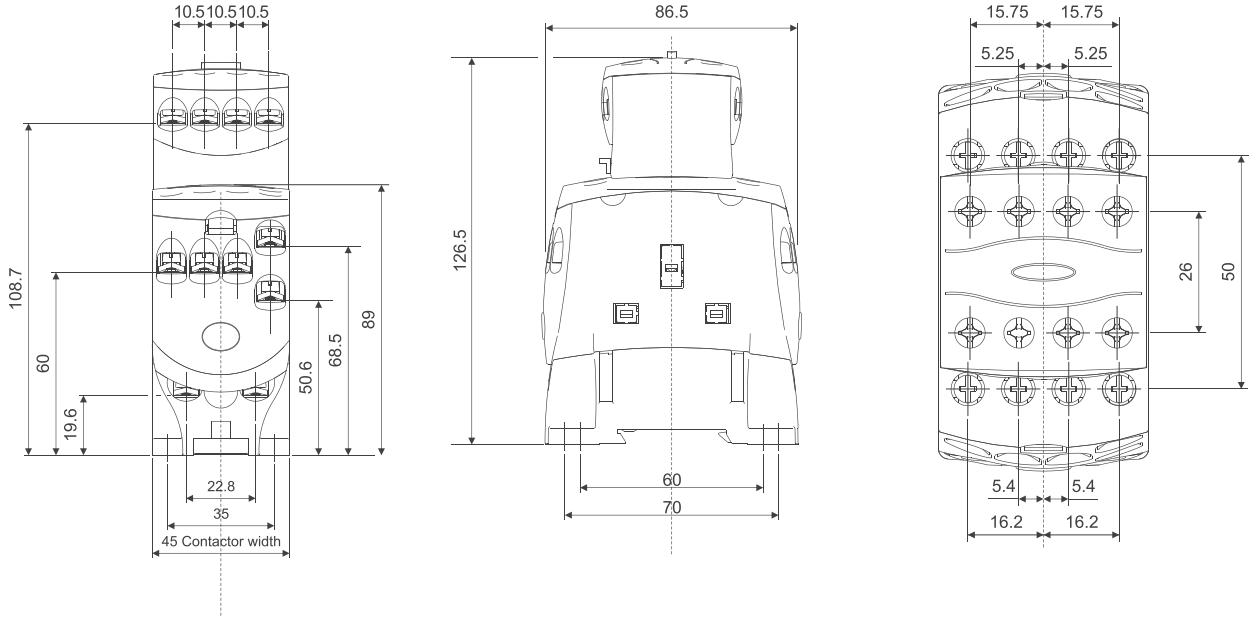

MO0 DC

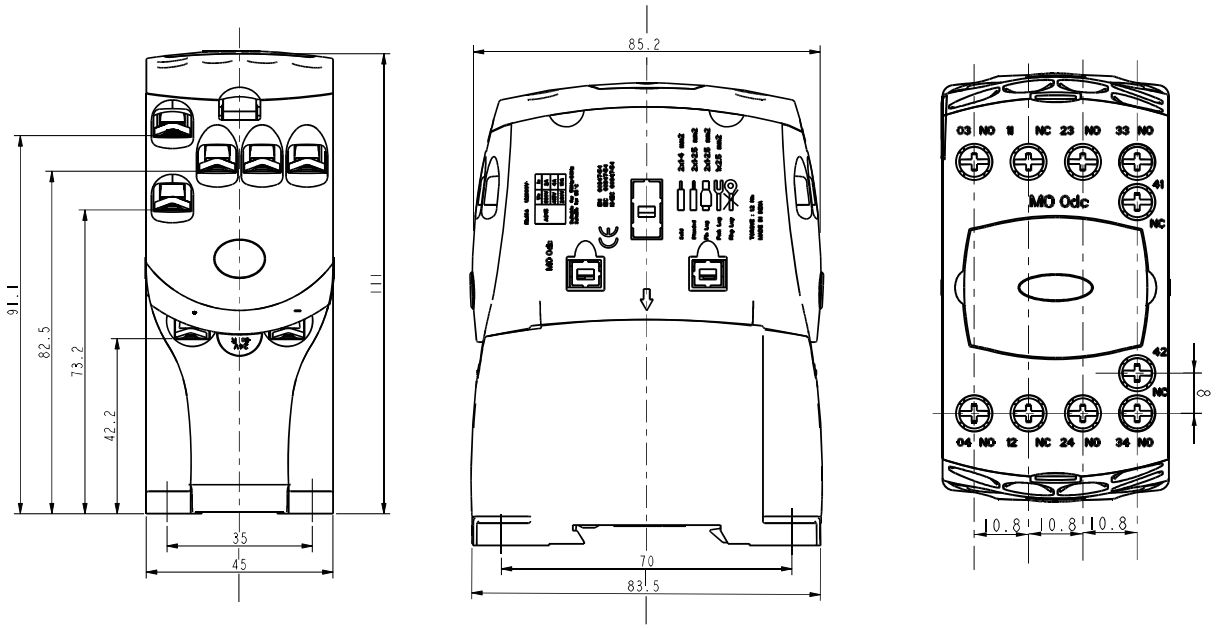

All dimensions in mm.





Electronic Coil Contactors for AC/DC Operation

MDX 50 – 110 A, MO 140 – 300 A and MVO 400 to 820 A are available with universal AC/DC electronic coil version. Electronic coils have wide operating band, serving as an energy efficient solution and thus reducing overall powerconsumption. These coils provide flexibility in using AC as well DC control supply and are available from 20V up to 415V.

Electronic Coil Range

Salient Features & Benefits

- MO 140 to 300A and MDX 50 to 115A are available with universal AC/DC electronic coil version.
- The electronic coil have voltage range starting from 20-48V to 240-415 V.





MDX Contactor

Type	AC-1 Rating (A)	AC-3 Rating (A)	Cat Nos
MDX 50	90	50	CS91584
MDX 65	110	65	CS91585
MDX 80	125	80	CS91586
MDX 95	125	95	CS91587
MDX 115	125	115	CS91588

MO Contactor

Type	AC-1 Rating (A)	AC-3e Rating (A)	Cat Nos
MO 140	250	140	CS95042
MO 185	275	185	CS95047
MO 225	275	225	CS95052
MO 250	400	250	CS94456
MO 300	500	300	CS94464

Ordering Suffix for Coil voltage

Coil Voltage	20-48	60-110	110-240	240-415
Suffix	JOOO	AOOO	BOOO	DOOO
Contactor	MDX 50-115	MDX 50-115	MDX 50-115& MO 140-300	MO 140-300



MR Single Pole Contactors

MR range caters to single phase applications. The contactors are rugged and have a wide operating band upto 25A (AC-3). Typical applications include Compressors in air-conditioning equipment, Single Phase Pumps, Single Phase Power Supply, Single Phase Heater etc. Their high AC-1 rating ensures better overload capacity.

Access new Levels of Versatility



Technical Details

- Wide operating band upto 25A AC-3
- High AC-1 rating ensuring better overload capacity
- Fast on termination (optional)





Type Designation		Units	MR 11W	MR 11NW	MR 13
Catalogue no.			CS94176	CS94177	CS94992
Conforms to standards			IS/IEC 60947-4-1, IEC 60947-4-1		
Power Contacts					
No. of poles			1	1+ shunted neutral	1
Rated insulation voltage	(U_i)	V	690		
Rated impulse withstand voltage	(U_{imp})	kV	8		
Conventional thermal current, I_{th}	(AC-1)	A	63	63	63
Motor duty : single phase 240 V, 50 Hz	(AC-3)	kW/hp/A	3.7 / 5 / 25	3.7 / 5 / 25	5.5 / 7.5 / 40
Motor duty: single phase 240 V, 50 Hz	(AC-4)	kW/hp/A	3.7 / 5 / 25	3.7 / 5 / 25	5.5 / 7.5 / 40
Short-circuit protection	gG fuse at 240 V	A	63	63	100
Mechanical life		Million	10	10	10
Maximum frequency :	(No Load)	Cy/h	7200		
	(AC-1)	Cy/h	3000		
	(AC-3)	Cy/h	750		
	(AC-4)	Cy/h	300		
Service temperature		℃	-5°C to 55°C		
Main terminal capacity	Solid conductor	Sq. mm	1 x 10		
	Multi strand	Sq. mm	2 x 10		
Coil					
Voltages available at 50 Hz, Uc		V	24, 220, 240		
	Pick-up	VA	40		
	Hold-on	VA	8.5		
		W	2.5		
Limits of operation	Pick-up	(% Uc)	60 - 110	60 - 110	80 - 110
	Drop-off	(% Uc)	20 - 50	20 - 50	20 - 65

Note: Ordering suffix BOOO-240 V, 50 Hz



MR 1 NO

Add on Auxiliary Contact Block for MR

Auxiliary contact block		Units	
Type designation			MR-A1
Catalogue no.			CS94179
Conforms to standards			IS /IEC 60947-5-1, IEC 60947-5-1
For contactors		W	MR 11W / MR 11NW
Contacts			
No. of poles			1
Contact details			1 NO
Rated insulation voltage, U_i		V	690
Conventional thermal current, I_{th}		A	10
Rated current at 240 V, 50 Hz	Utilization category AC-15	A	4
Short-circuit protection	gG fuse at 240 V	A	10
Electrical durability (AC-15) at 240 V, 50 Hz		Million	1
Maximum frequency of operation UC at for AC-15		Cy/h	1200
Service temperature		°C	-5°C to 55°C
Terminal capacity	Solid conductors	mm^2	2 x 2.5
	Multi-stranded conductors	mm^2	2 x 2.5

Overall Dimensions

MR 11W / MR 13

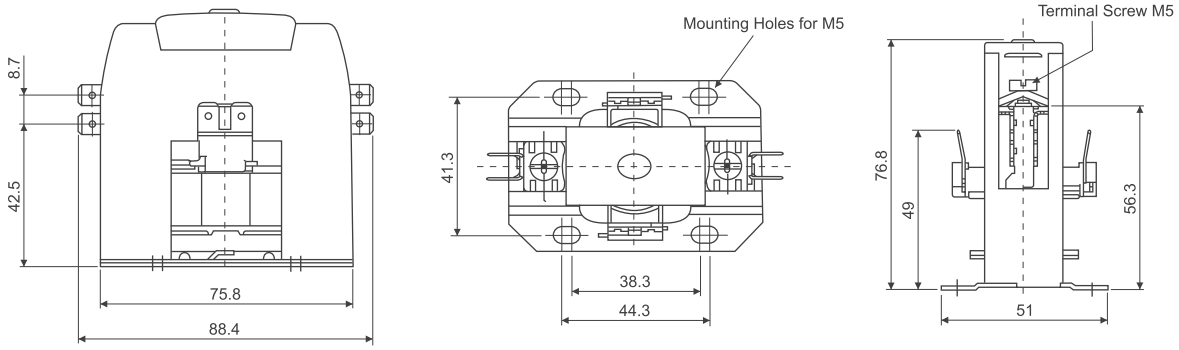

MR 11NW

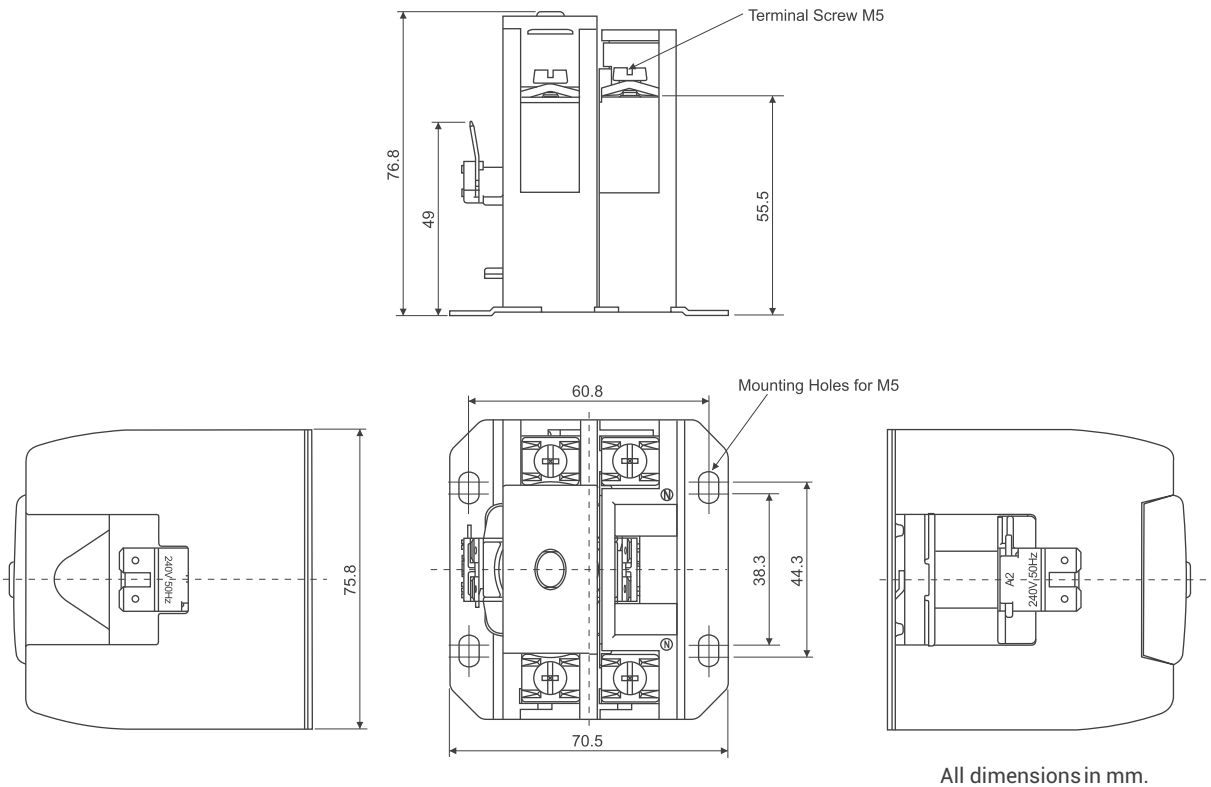

All dimensions in mm.



MU - 2P 2 Pole Contactors

MU Contactors are true 2 pole contactors with isolated neutral useful in motor starters. Available for 16 – 40 A current rating suitable for low voltage conditions.

One step Towards Smoother Start

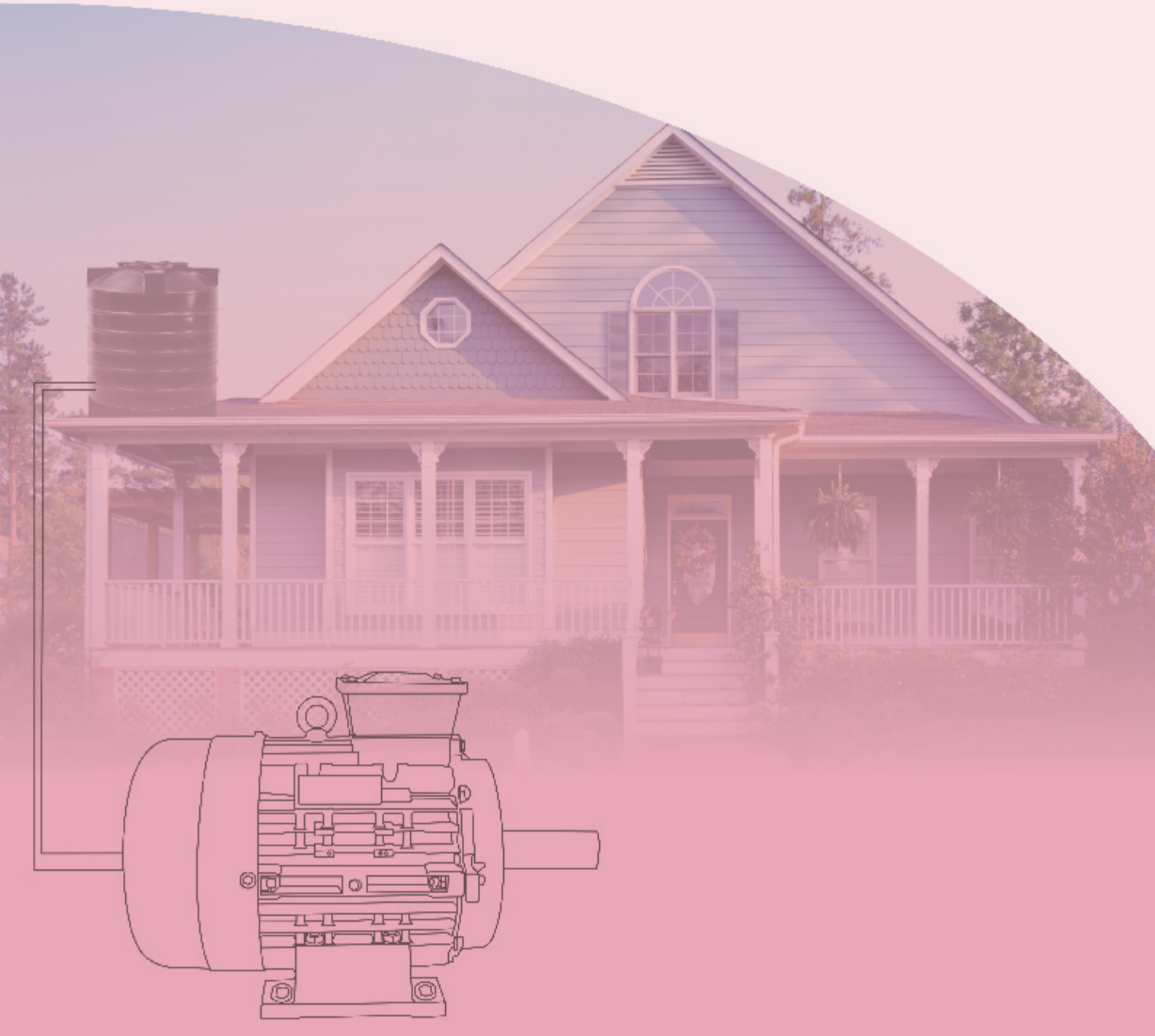

Technical Details



Features

- True 2 Pole Contactor
- Top Mounted Relay
- Top Mounted 2 Pole Add-on

Wide Band Potted Coil

Applications

- Single Phase Pump Control
- Single Phase Motors

Benefits

- Neutral Isolation
- Suitable For Low Voltage Conditions
- High Temperaturre With Stand Capability
- Coil Protection From Humid Environment

		Units	MU 16-2P	MU 25-2P	MU 40-2P
Catalogue No.			CS90117	CS90118	CS90119
Conformance to standards			IS/IEC 60947-4-1,IEC 60947-4-1		
No. of poles			2		
Rated operational voltage U_e		V	240V AC 50 Hz		
Rated insulation voltage U_i		V	690V AC 50 Hz		
Rated operation current I_e AC-3 at 240V 50 Hz		A	16	25	40
Rated thermal current I_{th}		A	32	45	50
Backup fuse rating		A	40	63	63
Mechanical life	Cycles	million	5		
Electrical life at 240V, at rated AC-3 current	Cycles	million	1		
Operations per hour	Mechanical	cy/hr	7200		
	AC-3	cy/hr	750		
Main terminal capicity	Al cable/Al Lug	mm	1 x 16		
	Bare conductors	mm	2 x 10		
	Multi strand conductors	mm	2 x 6		
Service temperature		°C	-5°C to +55°C		
Coil Circuit					
Rated coil voltages	Standard	V	220, 240		
	Wide band coil	V	160 - 220		
Coil consumption	Pick up VA	VA	77		
	Hold on VA	VA	13		
	Hold on W	W	4		
Coil operating band	Pick up		55% - 120% for Standard coil		
			75% - 120% for Wide band coil		
	Drop Off		30% - 50%		
Overall dimension (H X W X D)		mm^3	82.5 x 64 x 85.8		
Accessories			Top mounted 2 pole add-on		
Spares			Spare coil and Spare contactkit		

Overall Dimensions

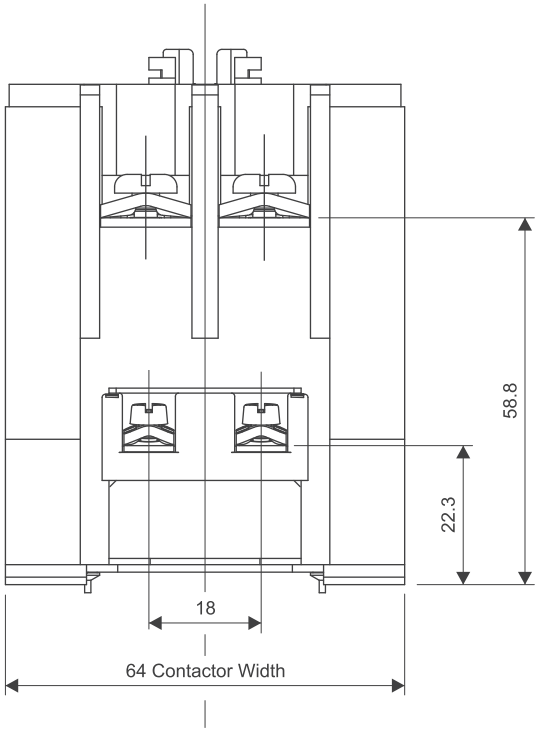

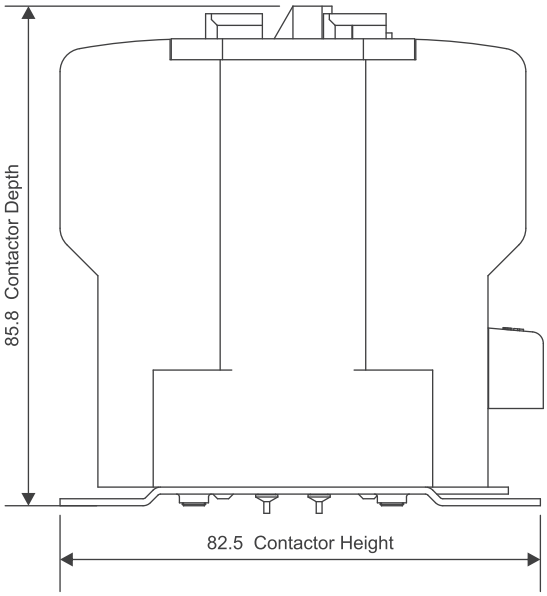

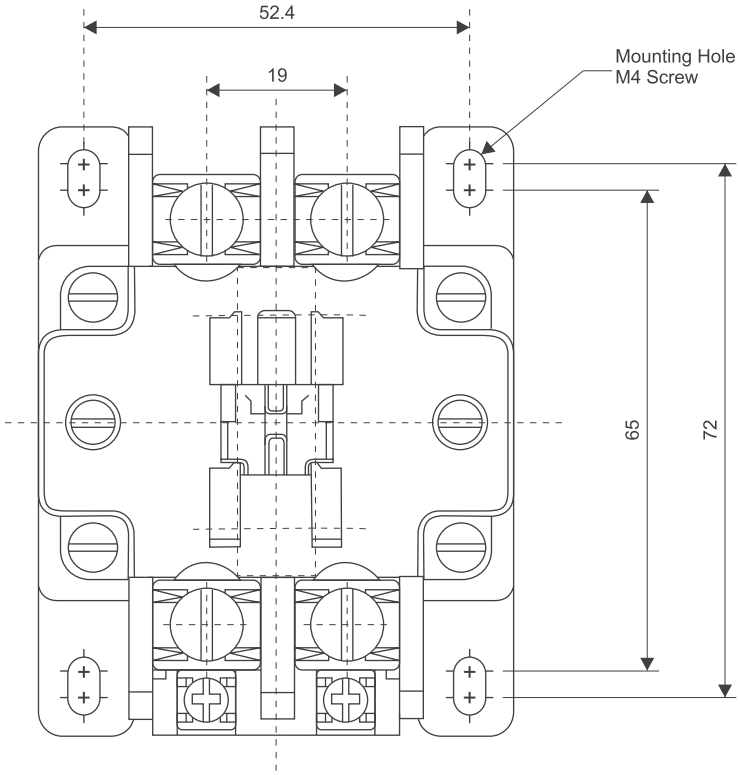

Technical Details

MU-2P Relay

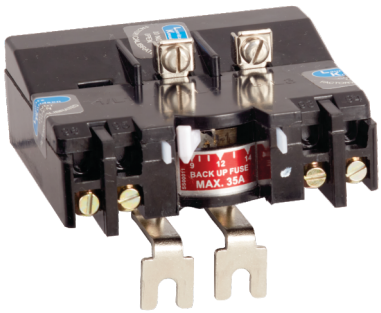

Features

- Available in 1 frame size from 1 - 40 A
- Direct mounting on MU-2P Contactors
- Trip class 10A
- Ambient temperature compensated
- Built-in single phasing protection

Type Designation		Units	MU-2P
Poles			2
Rated insulation voltage (U_i)		V	690
Rated impulse voltage (U_{imp})		kV	8
Rated operational current for AC-15 utilization category at 50 Hz	24 V	A	6
	110 V	A	5
	220 V	A	3
	415 V	A	2
Controls			Start and Off / Reset
Built in contacts			1NO (Start) and 1NC (Off/Reset)
Trip class		A	10
Ambient compensated			Yes
Service temperature		°C	-5°C to +55°C
Short circuit protection device			Fuse link, 63 A type HF
Mounting			Direct with MU-2P contactor
Terminal capacity (Unprepared conductor)	Main	mm^2	10
	Auxiliary	mm^2	2.5
Overall dimensions (H x W x D)		mm^2	70 x 84 x 82

Ordering information

MU-2P Contactor

Description	Catalogue Numbers		
	220V Coil	240V Coil	160-220V Coil
MU 16-2P	CS90117KOOO	CS90117BOOO	CS90117NOOO
MU 25-2P	CS90118KOOO	CS90118BOOO	CS90118NOOO
MU 40-2P	CS90119KOOO	CS90119BOOO	CS90119NOOO
Top add on block			
2 NO	CS906920OOO		
1 NO + 1 NC	CS906930OOO		
2 NC	CS906940OOO		
1 NO	CS906950OOO		
1 NC	CS906960OOO		
Spare coil	CS90793KOOO	CS90793BOOO	CS90793NOOO
Spare contact kit			
MU 16-2P	CS902170OOO		
MU 25-2P	CS902180OOO		
MU 40-2P	CS902190OOO		

MU-2P Relay

Description	Cat. No.
MU-2P Relay, 1 - 1.6 A	CS90207OOMO
MU-2P Relay, 1.5 - 2.5 A	CS90207OOPO
MU-2P Relay, 2.5 - 4 A	CS90207OORO
MU-2P Relay, 4 - 6.5 A	CS90207OOTO
MU-2P Relay, 6 - 10 A	CS90207OOVO
MU-2P Relay, 9 - 14 A	CS90207OOAO
MU-2P Relay, 11 - 18 A	CS90207OOCO
MU-2P Relay, 13 - 22 A	CS90207OODO
MU-2P Relay, 16 - 26 A	CS90207OOBO
MU-2P Relay, 20 - 32 A	CS90207OOEO
MU-2P Relay, 26 - 40 A	CS90207OOFO





Electronic Motor Protection Relay

Motor Protection relay protects the motor against burnout during overload or locked rotor condition and offers a wide range of specification to meet various needs, including protection against overload and phase reversal etc. The selection of MPR should be based on the cost and application of electric motor. Its appropriate selection not only prevents motor damage, but also ensures optimal process efficiency with minimal interruption.







EOLR - **E**lectronic **O**ver **L**oad **R**elay

EOCR - **E**lectronic **O**ver **C**urrent **R**elay

E&A's motor protection solutions are designed for enhanced protections of your motors and processes. With the introduction of REO EOLR and REO EOCR Electronic relays, E&A has a comprehensive motor protection solution starting from basic thermal overload relays to communicable intelligent motor management relays. These relays are designed using state-of-the-art technology to address all your motor management challenges. The aesthetics of these relays complement MO range of contactors

Salient Features

REO

ELECTRONIC OVERLOAD RELAYS





E&A introduces REO range of Electronic Overload Relays to complement the MO range of contactors. REO electronic overload relays are available in 2 version and in 2 frame size. REO range of Electronic Overload Relays provide protections against overload, single phasing, locked rotor and ground fault and are modular in design.

Features

- Visual Status Indication-tripped/non-tripped From Front
- Phase Failure Sensitive
- Locked Rotor And Ground Fault Protections
- Selectable Trip Class
- Auto Manual / Reset Function
- Test Functtion-simulated The Tripping Of The Relay From The Front
- Front Access To START And STOP/RESET Buttons
- Three Contacts: Alram, Trip And Start
- Isolated Alarm Circuit (N.O.) Contactors
- Direct Mounting On MO Contactors

Accessories

- Separate mounting kit
- Reset cord

Technical Details





Type	REO 1.1	REO 1.1G	REO 4	REO 4G
Main Circuit				
Conformance to Standards	IS/IEC 60947-4-1, IEC 60947-4-1, EN 60947-4-1			
Range	0.15-0.75A		18-90A	
	0.6-3A,		72-360A,	
	2.4-12A,		270-1350A	
	9-45A			
Mounting	Direct / Separate		Separate	
Direct Mounting on Contactors	MO 9 - 45		-	
Degree of Protection	IP 20			
Rated Insulation Voltage Ui	1000 V			
Rated Impulse Withstand Uimp	6 kV			
Rated Operational Voltage	415 V, 50 Hz / 480V, 60Hz			
Type of Operation	Direct Acting, Trip Free Mechanism			
Trip Class (Selectable)	10A, 10E, 20E, 30E			
Temp Compensation	(-20° to + 55°C)			
Protection Inbuilt	Overload, Single Phase, Phase Unbalance, Locked Rotor	Overload, Single Phase, Phase Unbalance, Locked Rotor, Ground Fault	Overload, Single Phase, Phase Unbalance, Locked Rotor	Overload, Single Phase, Phase Unbalance, Locked Rotor, Ground Fault
Terminal Capacity (Main)	Solid - 2 x 2.5 to 10 sq. mm. Finely Stranded - 2 x 2.5 to 6 sq. mm.		Solid : 1 x 4...240, 2 x 2.5...150 mm Finely Stranded : 1 x 4... 240 mm^2 Finely Stranded : 2 x 2.5... 150 mm^2	
Tightening Torque	1.2 Nm			
Type of Screw	M4"			
Auxiliary Circuit				
No. of Contacts	1NO - Alarm			
	1NO - Start			
	1NC - Trip			
Rated Insulation Voltage	1000V			
Rated Impulse Withstand	6 kV			
AC-15 Rating	2A at 415 V, 50 Hz			
Thermal Current	5A			
Terminal Capacity (Aux)	Solid or finely stranded-2 x 2.5 sq. mm,			
Tightening Torque	0.5 Nm			
Type of Screw	M3"			

Technical Details

REO Electronic Overload Relays

Type	Range (A)	Cat. Nos.
REO 1.1	0.15-0.75	CS90418OOJO
	0.6-3	CS90418OOQO
	2.4-12	CS90418OOLO
	9-45	CS90418OOGO
REO 1.1G	0.15-0.75	CS90423OOJO
	0.6-3	CS90423OOQO
	2.4-12	CS90423OOLO
	9-45	CS90423OOGO
REO 4	18-90	CS90418OOUO
	72-360	CS90418OORO
	270-1350	CS90418OOCO
REO 4G	18-90	CS90423OOUO
	72-360	CS90423OORO
	270-1350	CS90423OOCO

Accessories for REO Relays



Description	Cat. No.
REO Relay Separate Mounting Kit	CS96335OOOO
Reset cord	CS90425OOOO

Overall Dimensions

REO 1.1 / 1.1G

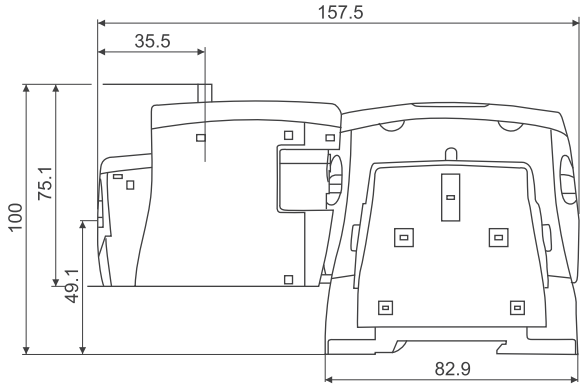

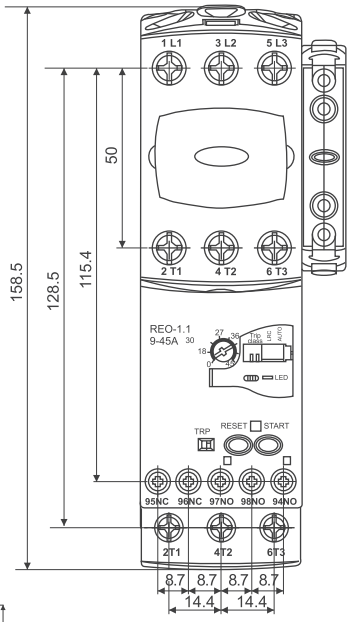

REO 4 / 4G

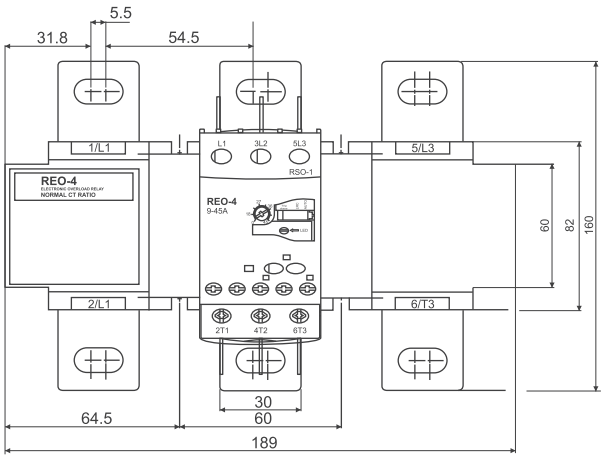

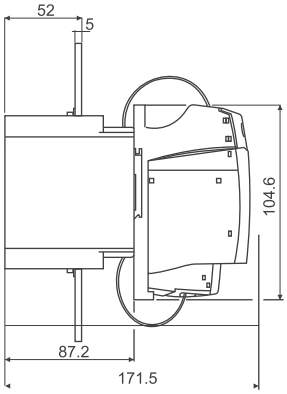

Assembly of separate mounting kit

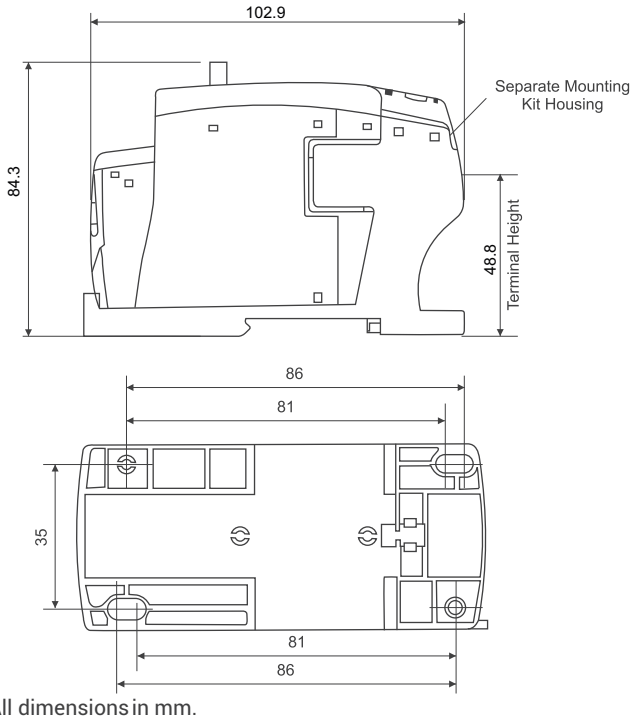

All dimensions in mm.

Reset Cord Fitment

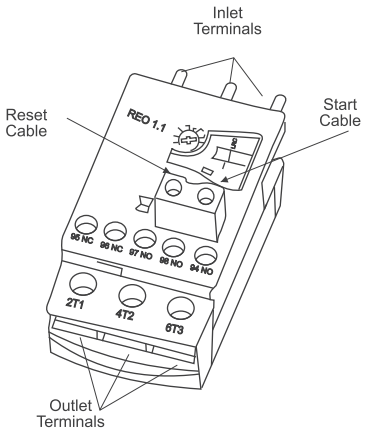

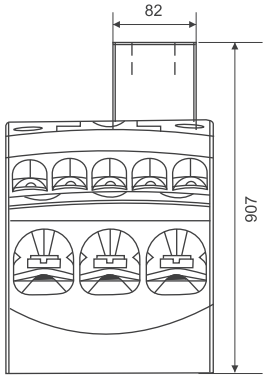

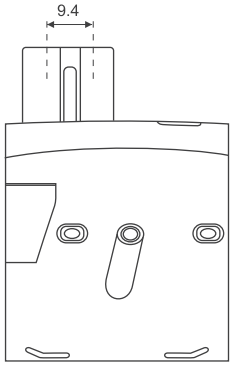

I-T Characteristics

EOLR - Class 10A (7.2Ir @ 4s) Hot & Cold Curve

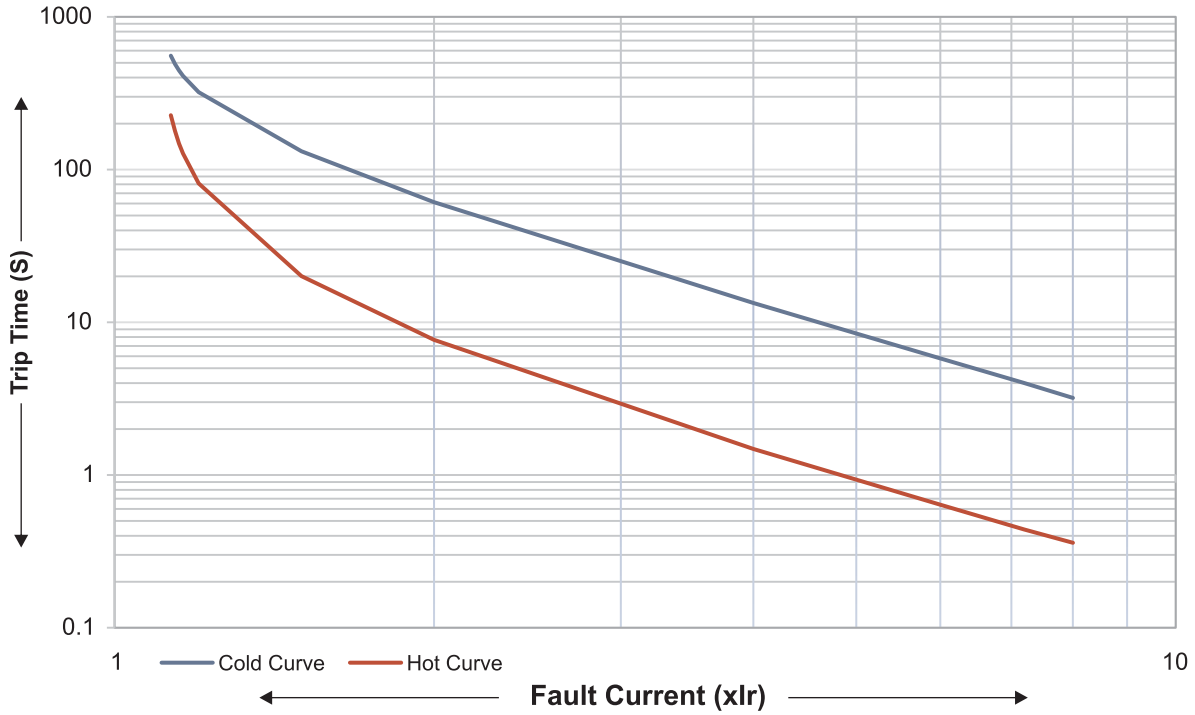

EOLR - Class 10A (7.2Ir @ 4s) Thermal Memory

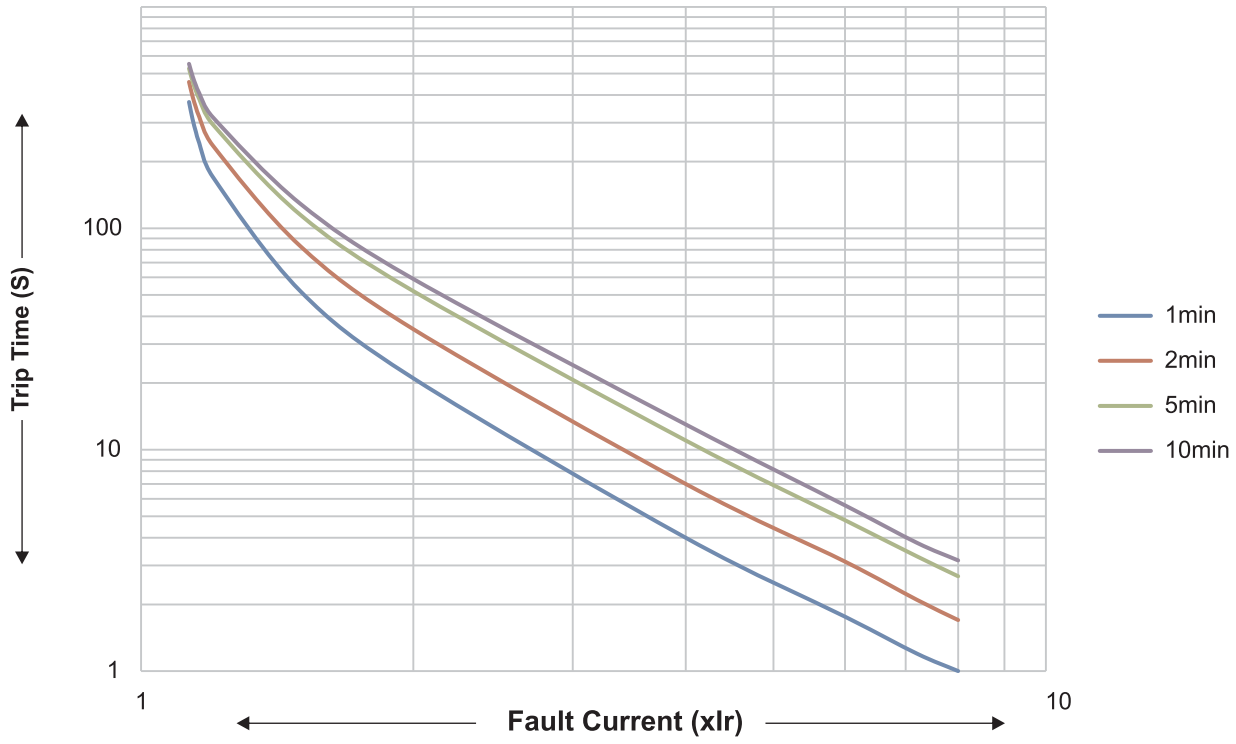

Eg.,
For fault current of 2A,
1. Trip time with cool down time of 1 min is 21 Sec
2. Trip time with cool down time of 5 min is 52 Sec

I-T Characteristics

EOLR - Class 10E (7.2Ir @ 7s) Hot & Cold Curve

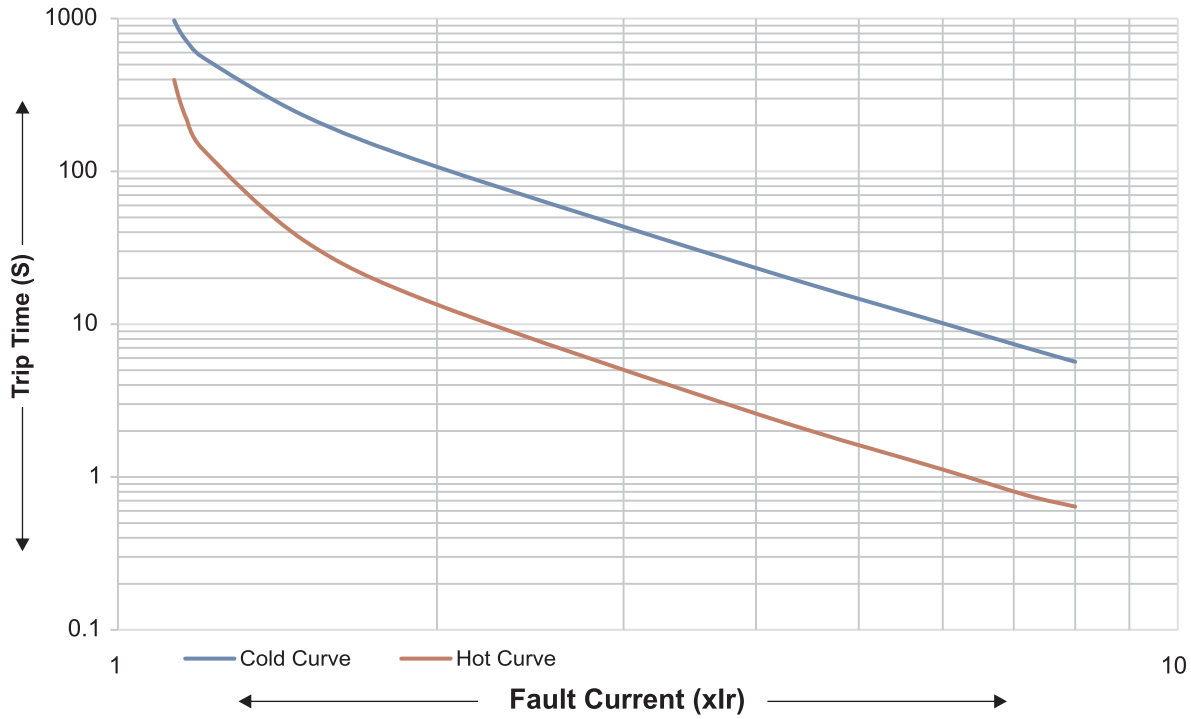

EOLR - Class 10E (7.2Ir @ 7s) Thermal Memory

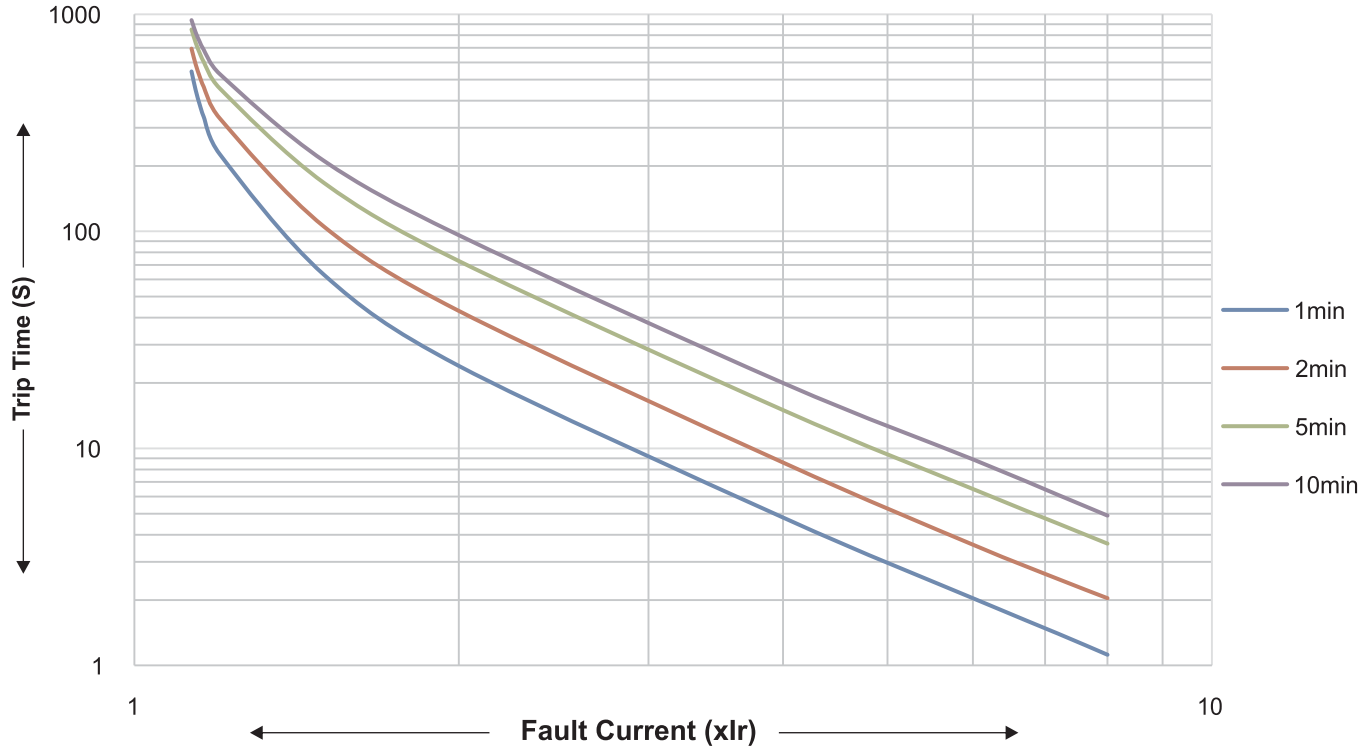

Eg.,
For fault current of 2A,
1. Trip time with cool down time of 1 min is 24 Sec
2. Trip time with cool down time of 5 min is 73 Sec

I-T Characteristics

EOLR - Class 20E (7.2Ir @ 13s) Hot & Cold Curve

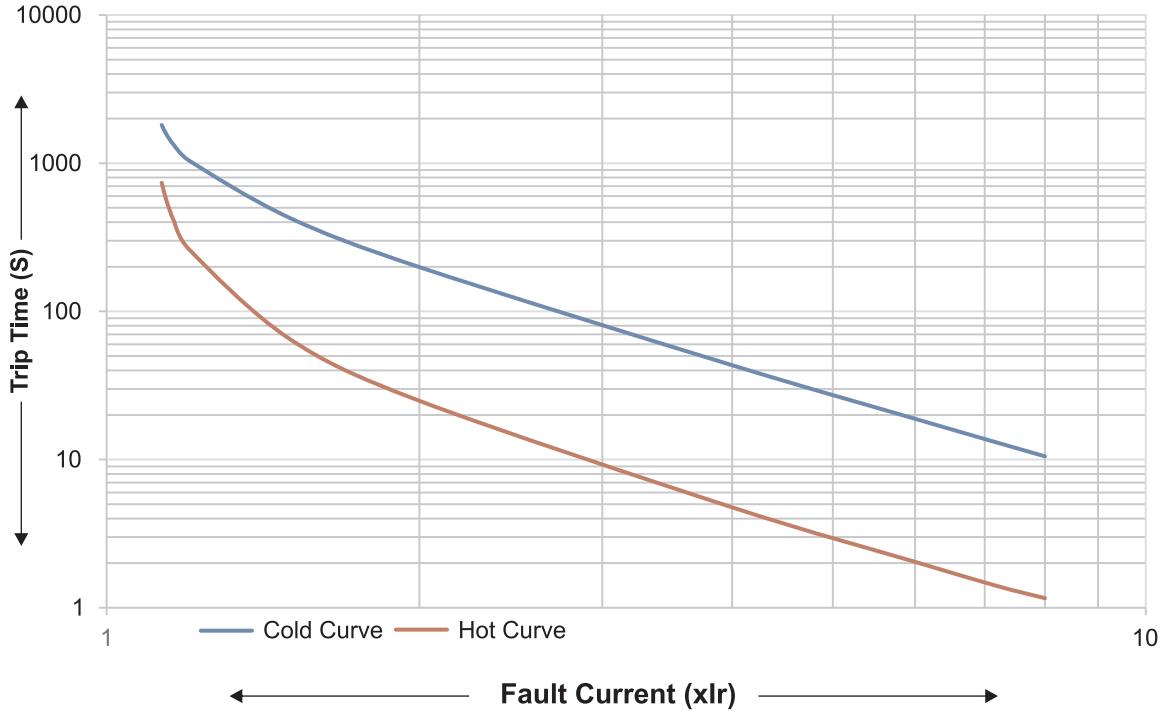

EOLR - Class 20E (7.2Ir @ 13s) Thermal Memory

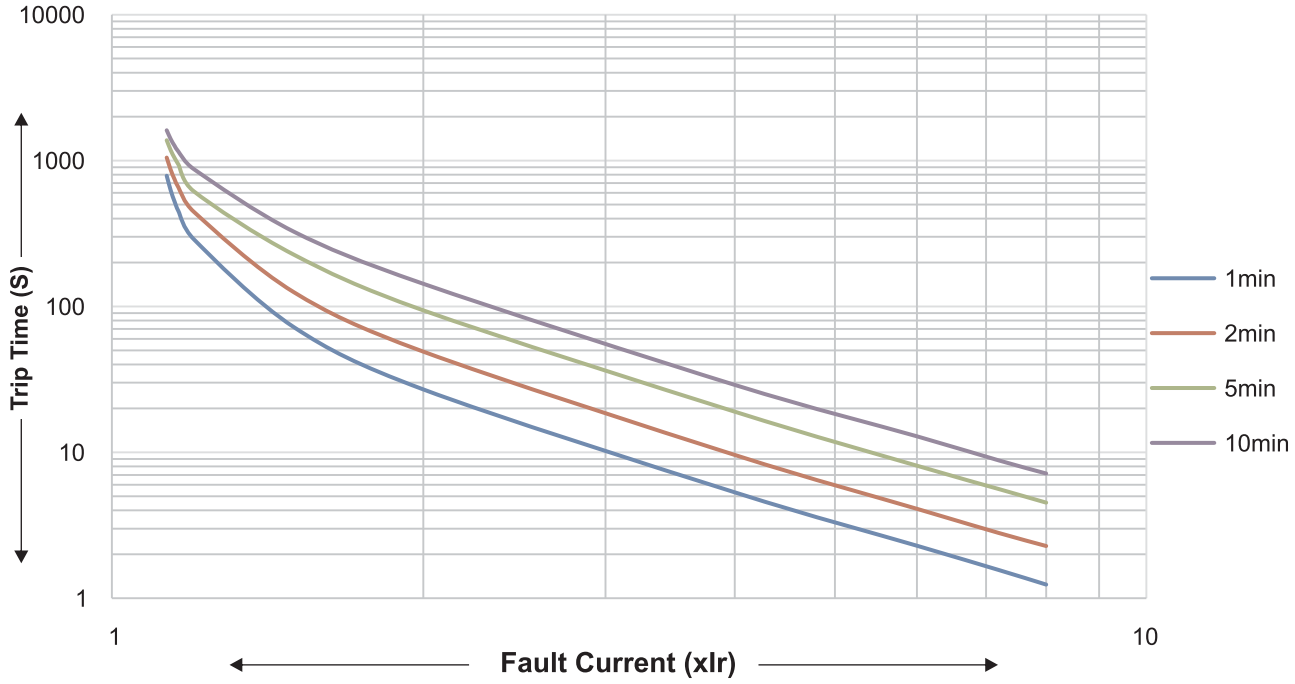

Eg.,
For fault current of 2A,
1. Trip time with cool down time of 1 min is 27 Sec
2. Trip time with cool down time of 5 min is 94 Sec

I-T Characteristics

EOLR - Class 30E (7.2Ir @ 24s) Hot & Cold Curve

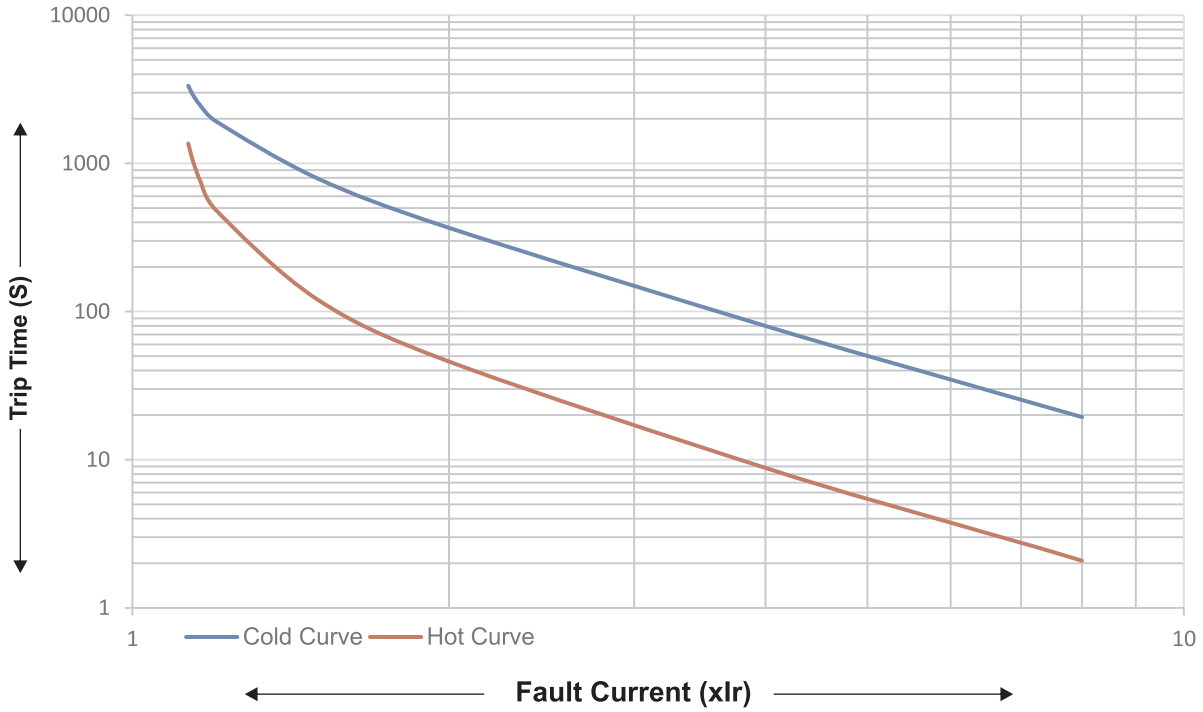

EOLR - Class 30E (7.2Ir @ 24s) Thermal Memory

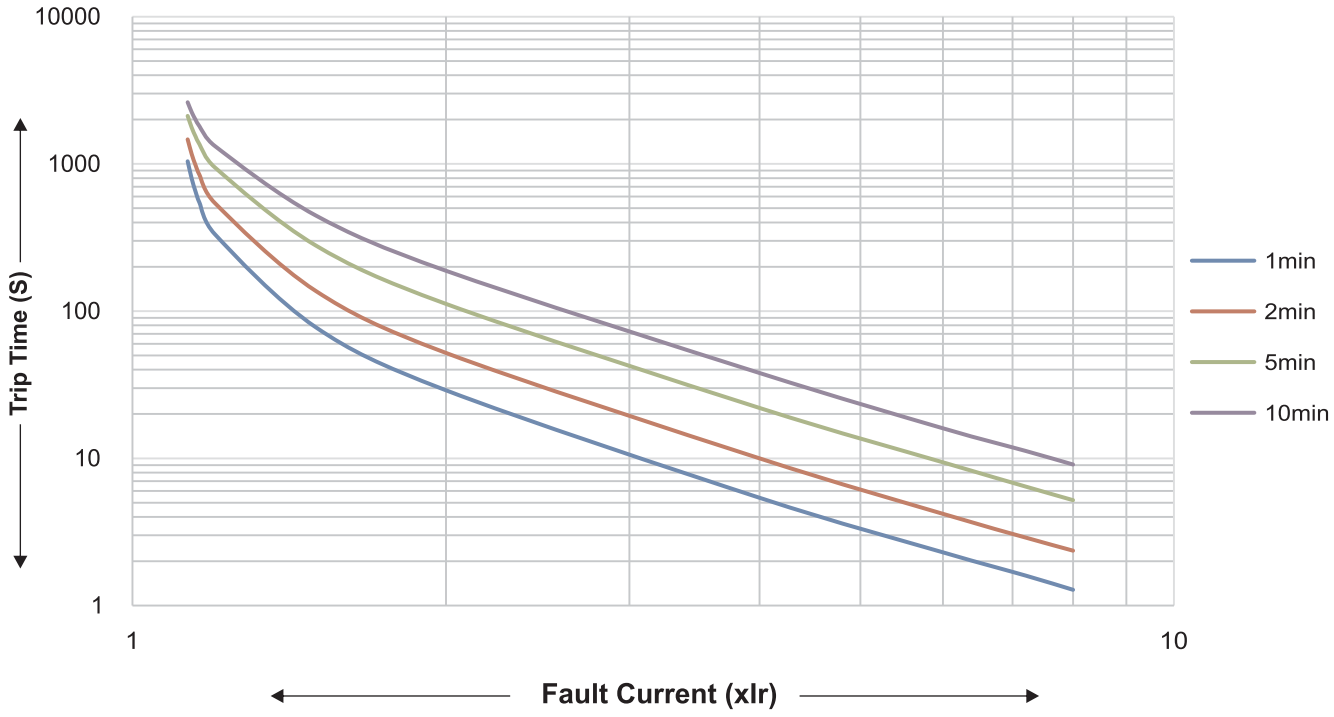

Eg.,
For fault current of 2A,
1. Trip time with cool down time of 1 min is 29 Sec
2. Trip time with cool down time of 5 min is 112 Sec

Salient Features

REO

ELECTRONIC OVERCURRENT RELAYS





REO range of Electronic Overcurrent Relays to complete the portfolio of motor protection relays. These relays complement MO range of contactors as they have similar aesthetics as MO range and can be directly mounted on the same. The relays trip based on definite time characteristics. That is, the relay has settable Start time and Trip time.

Features

- Visual Status Indication-tripped/non-tripped From Front
- Phase Failure Sensitive
- Locked Rotor
- Selectable start time and Trip Class
- Auto Manual / Reset Function
- Test Functtion-simulated The Tripping Of The Relay From The Front
- Front Access To START And STOP/RESET Buttons
- Three Contacts: Alram, Trip And Start
- Isolated Alarm Circuit (N.O.) Contactors
- Direct Mounting On MO Contactors

Accessories

- Separate mounting kit
- Reset cord

Technical Details



Type	REO 1.1C
Main Circuit	
Conformance to Standards	IS/IEC 60947-4-1, IEC 60947-4-1, EN 60947-4-1
Range	0.15-0.75A
	0.6-3.0A
	2.4-12A
	9-45A
Mounting	Direct
Direct Mounting on Contactors	MO 9 - 45 -
Degree of Protection (from front)	IP 20
Rated Insulation Voltage Ui	690 V
Rated Impulse Withstand Uimp	6 kV
Rated Operational Voltage	415 V, 50 Hz / 480V, 60Hz
Type of Operation	Direct Acting, Trip Free Mechanism
Selectable Start Time	5s, 10s, 20s, 40s
Selectable Trip Time	2s, 4s, 8s, 16s
Temperature Compensation	(-20° to +60°) C
Protection In-built	Overcurrent, Single Phase, Phase unbalance, Locked rotor
Terminal Capacity	2 x 1 to 10Sq mm Solid or Fine stranded
Tightening torque	2.5 Nm
Type of Screw	M4
Short Circuit Protection	63 A HN 000 Max
Auxiliary Circuit	
No of Contacts	1NC - Trip, 1NO - Alarm, 1NO - Start
Rated Insulation	300V
Rated Impulse Voltage	4 kV
AC - 15 Rating	5A
Short Circuit Protection	6 A Fuse or MCB C type
Terminal Capacity (Aux)	M3 (1.2Nm), 2 x 1 to 2.5 sq.mm. Solid or Fine stranded
Aux Circuit	M3 (1.2Nm)
Overall	
Product Dimensions (HxWxD)	70 x 45 x 78.5

REO Electronic Overload Relays

Description	Cat. Nos.
REO 1.1C RELAY - 0.15 - 0.75A	CS919110OJO
REO 1.1C RELAY - 0.6 - 3A	CS919110OQO
REO 1.1C RELAY - 2.4 - 12A	CS919110OLO
REO 1.1C RELAY - 9 - 45A	CS919110OGO

Accessories for REO Relays



Description	Cat. No.
REO Relay Separate Mounting Kit	CS963350OOO
Reset cord	CS904250OOO

Overall Dimensions

REO 1.1C

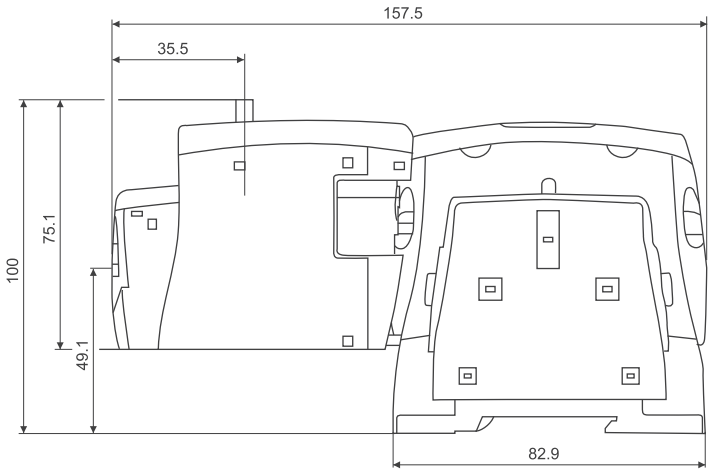

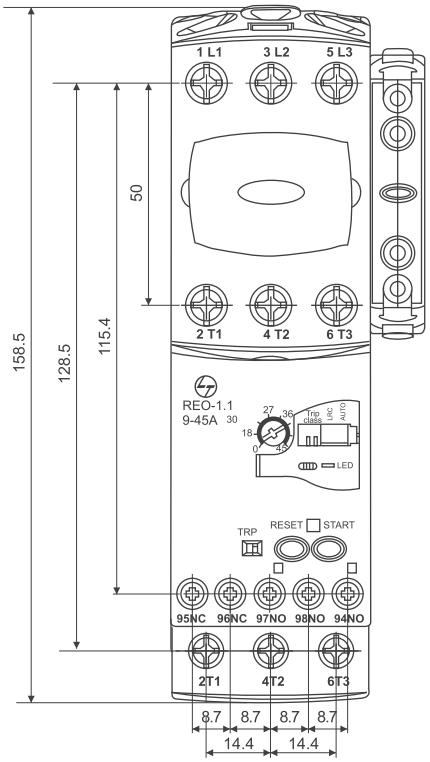

Assembly of separate mounting kit

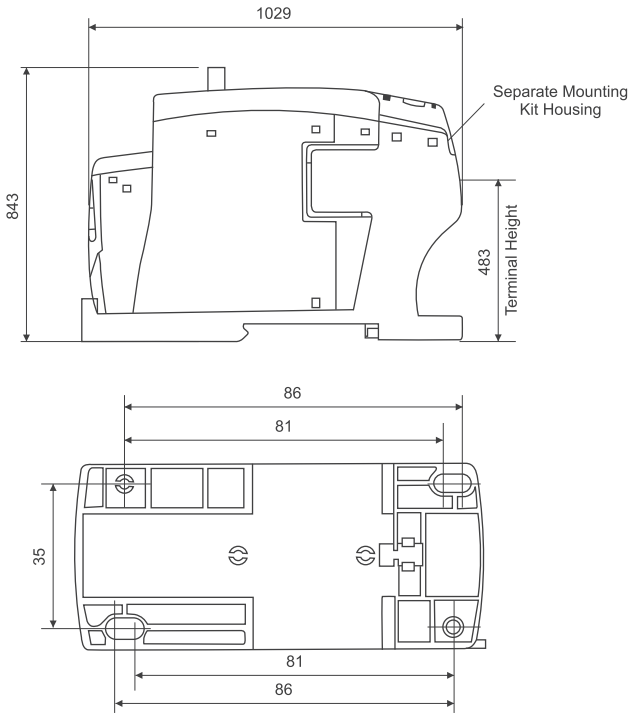

Reset Cord Fitment

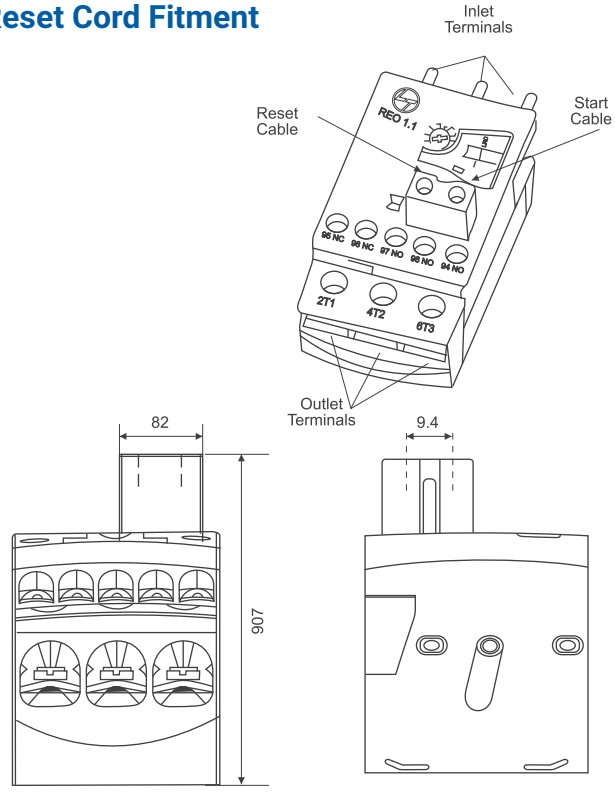

All dimensions in mm.

MM10

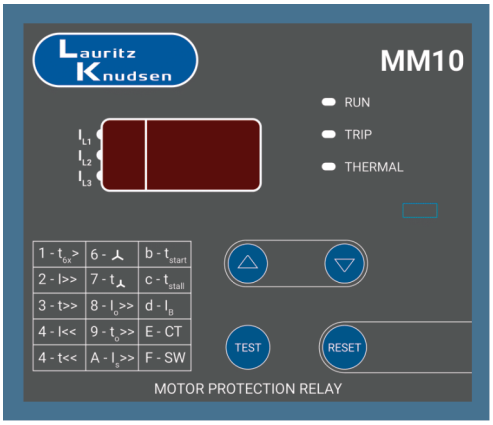

Mm10 is a Compact Microprocessor based Motor Protection Relay for medium and large size Motors

Protections offered:

37, 46, 49, 50/ 51, 51LR, 64

- Thermal Overload With Warning
- Under Current
- Unbalance
- Phase Loss
- Phase Sequence Reversal
- Earth Fault
- Prolong Starting, Locked Rotor
- Short Circuit

Features

- Digit LED display
- Measurement of RYB, Zero Sequence current and Thermal capacity.
- Separate LED's for indication of Motor operational, Trip & Thermal OL/ pre-alarm status.
- Programmable thermal OL time constant right from 1 sec to 40 sec.
- 2 nos. of C/O output contacts.
  2nd output contact is programmable type. It can be configured for following conditions:
  i) On any tripping
  ii) On thermal tripping
  iii) On thermal Warning
- Relay output 'R1' works with fail-safe logic.
  For technical info on fail-safe logic, refer Appendix I
- Programmable Binary input for remote operation.
  It can be configured for either of these operations:
  i) Inhibit Motor Start
  ii) Trip Reset
  iii) Instant Tripping
- Relay testing facility
  Test push button to check working of relay contacts.
- Trip data recording
  Fault current or cause of last trip is displayed

Wiring diagram

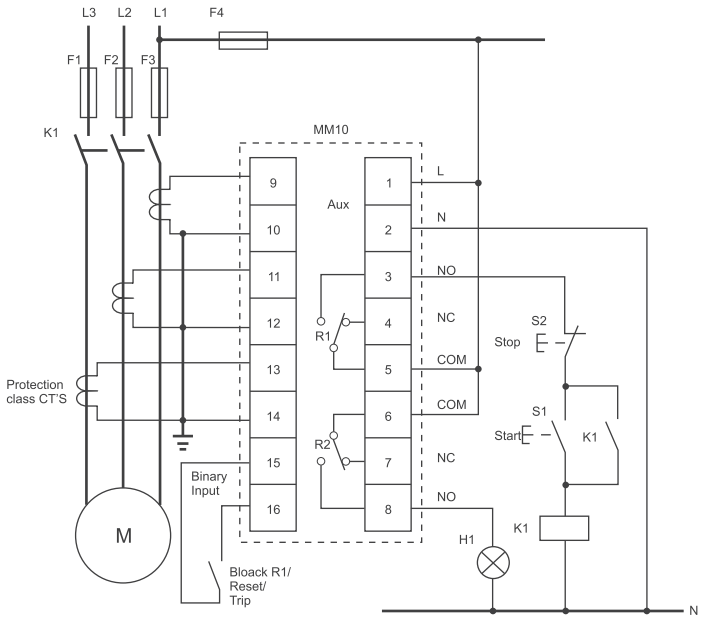

External CT's - Protection class CT's [5 - 1000 Amps] with 5 Amp secondary

Technical Details

Functions		MM10
Protections	ANSI nos.	37, 46, 49, 50/51, 51LR, 64
	Description	Thermal overload with Warning, Short Circuit, Under Current, Unbalance, Phase Loss, Phase Sequence Reversal, Earth Fault, Prolong Starting, Locked Rotor
Metering		I_R, I_Y, I_B, I_O, Thermal Capacity
Digital Input + Output		1 DI + 2 CO Type DO
Monitoring		Last 1 Trip
Auxiliary Supply		110 - 240V AC/DC
Current Input		5 A CT secondary
Binary Input Voltage Rating		12 V supplied internally
Output Contact	Rating	5 A, 250 VAC ($\cos\Phi = 1$)
	Operating time	15 ms Max
	Electrical life	1,00,000 Operations at IR
	Mechanical life	5 x 10^6 Operations
Maximum Power Consumption		3 VA typical
Burden on CT		0.3 VA at Rated Current
Operating Temperature		-5°C to 55°C
Degree of Protection		IP52
Weight		0.75 Kg
Mounting		Panel Mounted
Dim W x H x D in mm		96 x 96 x 110
Panel Cut Out in mm		90 x 90

Dimensions

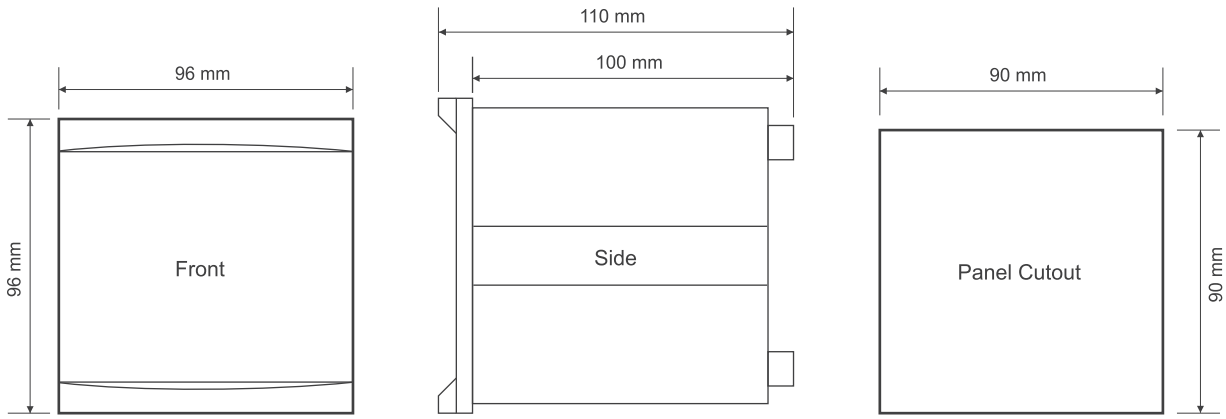

iMMR



iMMR is an Intelligent Motor Control Centre (IMCC) Relay. It has been designed as a reliable building block for low voltage, contactor - controlled motor starter feeders in switchgear assemblies. The new iMMR series offers comprehensiveMotor Protection along with Control and Monitoring features.

iMMR Main Unit -

- An extremely compact motor protection relay with control and monitoring functions.
- 4 DI+3 DO available to take care of DOL, Star-Delta and RDOL starters
- 4 LED's for easy troubleshooting and a RESET button is available on main unit.
- Inbuilt Modbus RTU, Profibus-DP, Modbus TCP/IP protocol.

Display Unit -

- An self-powered display module provides easy interface for monitoring and configuration of iMMR
- The display unit is a detachable optional unit provided with iMMR for display of all metering, protection and fault data.
- 5 LED's and START/ STOP/ RESET buttons are available on Display unit.

CT/CTVT Unit -

- iMMR comes with its own current module and current + Voltage module in two sizes and suitable for use from 0.3 Amp to 70 Amp (Max upto 360 kW)

User Friendly Options & Features

Highly scalable IO - 4 digital input and 3 changeover digital outputs are available in base unit.

Universal Operating environment - Auxiliary supply range of 85 - 240 VAC/VDC

Metering - Includes line, neutral & average current, line voltage & phase voltages, Power, Energy, Power Factor, Temperature and Thermal Capacity

Monitoring - 100 events & 20 trip data recording with date & time stamping. Recording of No. of start, Stop, Starting Curve, starting time is also available.

Communication - iMMR can be connected to Plant Control System (SCADA/DCS) through Modbus RTU, Profibus-DP, Modbus TCP/IP communication protocol

Temperature Monitoring - Unit takes input from RTD or PTC.

iMMR Suite - This software for local parameterization and monitoring of iMMR Relay. Users can create, save, read, and write the settings.

iMMR Suite



Graphical Logic



Setting Range Chart for Protections

Protection Function	Variable	Range
Thermal Overload	Alarm	80 -100% of TM
	Thermal reset level	30-95% of TM
	Cool down time	0.0 - 6000.0 Sec
Under Current	Pick up	15 - 100% Iflc
	Alarm	100-115%
	Trip Delay	0.100 - 6000 Sec
NI Over Current	Pick up	20 - 1000% Iflc
	Alarm	25-100% of Pick up
	Trip Delay	0.100 - 200 Sec
Stalled Rotor	Pick up	50 - 1000% Iflc
	Alarm	25-100% of Pick up
	Trip Delay	0.100 - 6000.0 Sec
DT Over current	Pick up	50 - 1000% Iflc
	Alarm	25-100% of Pick up
	Time During Start	0.100 - 6000.0 Sec
	Time During Run	0.100 - 6000.0 Sec
Locked Rotor	Pick up	150 - 1000% Iflc
	Alarm	25-100% of Pickup
	Trip Delay	0.100 - 6000.0 Sec
Short Circuit	Pick up	100 - 1000% Iflc
	Alarm	25 - 100% of Pick up
	Trip Delay	0.050 - 10 Sec
Current Phase Loss	Time Delay	0.100 - 6000.0 Sec
Earth Fault (Internal) OrExternal)	Pick up	10 - 500% Iflc
	Alarm	25-100% of Pick up
	Trip Delay	0.5 - 10 Sec
	Pick up	0.030 - 40A
	Alarm	25-100%
	Trip Delay	0.100 - 6000 Sec
Under Volatge	Pick up	25 - 100% Vn
	Alarm	110% of Pick up
	Trip Delay	0.100-6000 Sec
Over Volatge	Pick up	101 - 130% Vn
	Alarm	25 -100%
	Trip Delay	0.1000 - 6000 Sec
Current Phase Reversal	Time Delay	0.100 - 6000.0 Sec
Voltage phase unbalance	Pick up	5 - 50%
	Alarm	Equal to Pickup level
	Trip Delay	0.100 - 6000.0
Voltage phase reversal	Time Delay	0.100 - 6000.0 Seconds
Voltage phase loss	Time Delay	0.100 - 6000.0 Sec
Over Frequency	Pick up	100 - 110%
	Alarm	99% of Pickup
	Trip Delay	0.100 - 6000.0 Sec
Under Frequency	Pick up	90 - 100%
	Alarm	101% of Pickup
	Trip Delay	0.100 - 6000.0 Sec
Over Power	Pick up	20 - 1000%of Pn
	Alarm	20 - 1000%of Pn
	Trip Delay	0.100 - 6000.0 Sec
Under Power	Pick up	20 - 1000%of Pn
	Alarm	20 - 1000%of Pn
	Trip Delay	0.100 -6000.0 Sec
Over PF	Pick up	0.4 - 1.00
	Alarm	0.4 - 1.00
	Trip Delay	0.100 - 6000.0 Sec

Metering Specifications

Monitoring	Specifications
Event & Trip Records	Stores last 20 trip records with the date and time stamp
	Stores last 100 Event records with the date and time stamp
Hour Meter	Records and Stores last operational stops and total operational hours
Start, Stop, Trip Counter	Records and stores number of starts, stops and trip of the motor
Starting Curve	Records and stores starting characteristics of motor
Starting Time	Records and stores the Start time of the motor
Starting Peak current	Record the peak current during starting of the motor
DI/DO Status	Displays real time status (high or low) of digital input and output of the relay

iMMR System Overview

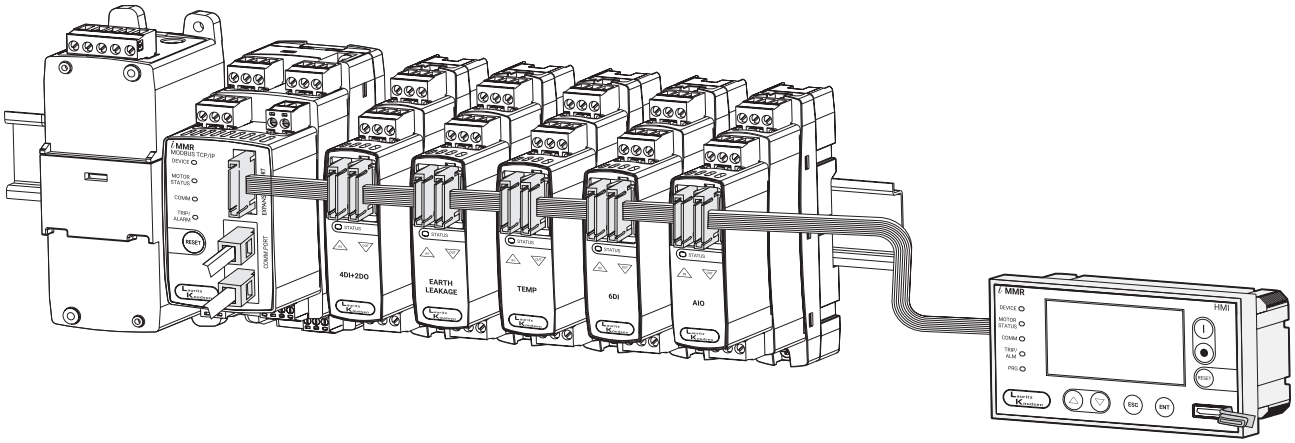

Note: Expansion module to be mounted on Right side of Main Unit.

Mounting Options

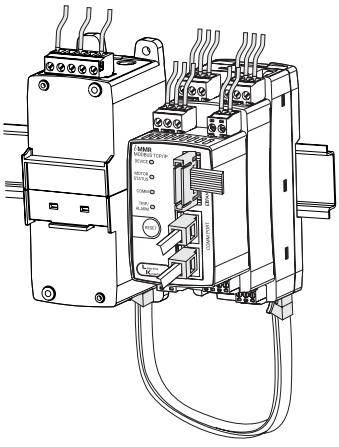

1. Side-wise

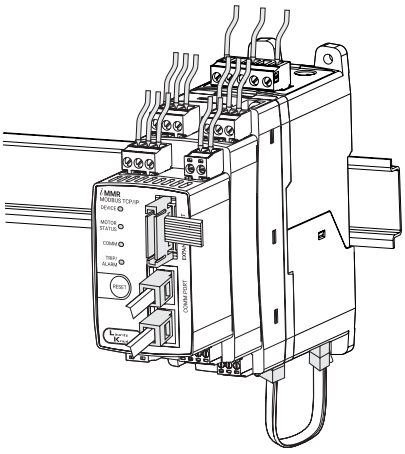

2. Mounting above CT unit

Note:
1. CT/CTVT unit should be mounted on the left side of the main unit.
2. Main unit of iMMR can be placed on the CT/CTVT unit.

Product Specifications

Current Measurement	
Range	Type 1: 0.3 - 3AAC Type 2: 2.5 - 25AAC
Accuracy	+/- 1% in nominal range
Voltage Measurement	
Range	60 - 690V AC
Accuracy	+/- 1% in nominal range
Frequency Measurement	
Range	45Hz - 65Hz
Accuracy	+/- 1% in nominal range
Power Measurement	
Active Power Accuracy	+/- 2% in nominal range
Power FactorRange	0.4 - 1.0
Power factor Accuracy	+/- 0.03

Product Dimensions

iMMR Module Name	Dimensions (H x W x D) in mm
Main Module	112 x 45 x 90
CT1, CT1VT module	126 x 45 x 55
CT2, CT2VT module	126 x 45 x 55
Display Module	51 x 96 x 36
CT3, CT3VT module	126 x 55 x 56

Metering Data

- Current - R, Y, B, EF, Unbalance
- Voltage, Frequency, KW, KVAr, KVA, PF, KWh, KVArh, KVAh
- Voltage and Current THD
- Thermal Memory, Motor status, Starting current and time
- Thermal time to trip, time to cool, Run hours

Standard Schematic

OVERLOAD

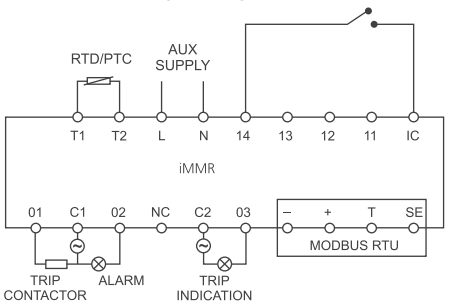

DI/DO	TERMINAL NO.	FUNCTION/SOURCE	ACT.TYPE	APPLICATION
DO1	O-C1	TRIP	ACT.LOW	CONTACTOR CONTROL
DO2	O2-C1	ALARM	ACT.HIGH	ALARM INDICATION
DI4	IC-I4	TRIP RESET	ACT.HIGH	TRIP RESET
DO3	O3-C2	TRIP	ACT.HIGH	TRIP INDICATION

Note: DI - Potential Free Signal
DO - Potential Free Contact

DOL

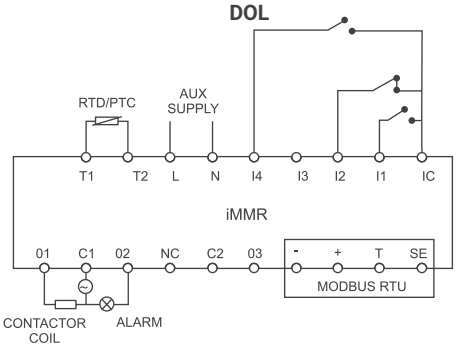

DI/DO	TERMINAL NO.	FUNCTION/SOURCE	ACT.TYPE	APPLICATION
DI1	IC-I1	LSTRT>	ACT.HIGH	LOCAL START
DI2	IC-I2	LSTOP	ACT.LOW	LOCAL STOP
DI4	IC-I4	TRIP RESET	ACT.HIGH	TRIP RESET
DO1	O1-C1	CONTACTOR O/P1	ACT.HIGH	CONTACTOR COIL
DO2	O2-C1	ALARM	ACT.HIGH	ALARM INDICATION

Note: DI - Potential Free Signal
DO - Potential Free Contact

RDOL

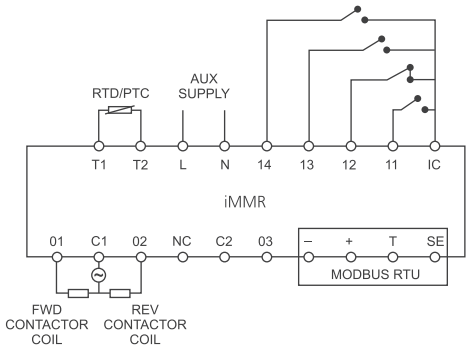

DI/DO	TERMINAL NO.	FUNCTION/SOURCE	ACT.HIGH	APPLICATION
DI1	IC-I1	L STRT >	ACT.HIGH	LOCAL START FWD
DI2	IC-I2	L STOP	ACT.LOW	LOCAL STOP
DI3	IC-I3	L STRT <	ACT.HIGH	LOCAL START REV
DI4	IC-I4	TRIP RESET	ACT.HIGH	TRIP RESET
DO1	O1-C1	CONTACTOR O/P1	ACT.HIGH	FW CONTACTOR COIL
DO2	O2-C1	CONTACTOR O/P2	ACT.HIGH	REV CONTACTOR COIL

Note: DI - Potential Free Signal
DO - Potential Free Contact

STAR-DELTA

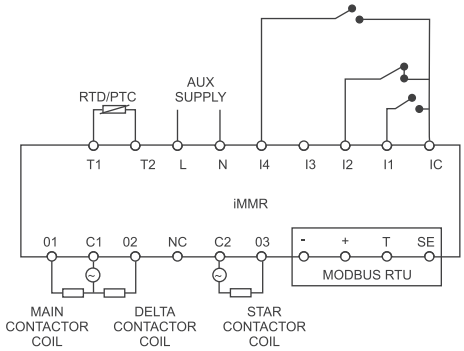

DI/DO	TERMINAL NO.	FUNCTION/SOURCE	ACT.TYPE	APPLICATION
DI1	IC-I1	LSTRT>	ACT.HIGH	LOCAL START
DI2	IC-I2	LSTOP	ACT.LOW	LOCAL STOP
DI4	IC-I4	TRIP RESET	ACT.HIGH	TRIP RESET
DO1	O1-C1	CONTACTOR O/P3	ACT.HIGH	MAIN CONTACTOR COIL
DO2	O2-C1	CONTACTOR O/P2	ACT.HIGH	DELTA CONTACTOR COIL
DO3	O3-C2	CONTACTOR O/P1	ACT.HIGH	STAR CONTACTOR COIL

Note: DI - Potential Free Signal
DO - Potential Free



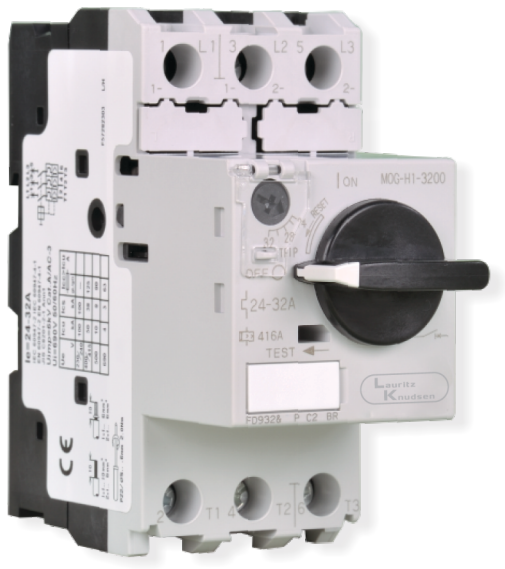

MOG Manual Motor Starter

MOG MMS integrates short circuit protection and overload relay function into a highly compact unit. The MMS can be used in numerous small and medium motor loads requiring high breaking capacity. Also, the compact size of the MMS enables a smaller installation area with less wiring space, thus reducing panel space.

Unlock the Benefits of Double Protection



Manual Motor Starter



Functions

Moulded Case Circuit Breaker and Thermal Overload Relay functions integrated into a highly compact unit known as Manual Motor Starter.

Circuit Breaker Functions

- Short circuit protection
- Overcurrent protection
- Line protection

Thermal Overload Relay Functions

- Overload protection
- Phase loss protection
- Rated current adjustment
- Ambient temperature compensation

MMS - Advantages

- Compact
- High breaking capacity
- Short circuit protective coordination
- Reduction in wiring work
- Ecological design standards

Selecting the Appropriate Model

Procedure for selecting the appropriate model:

Confirm the motor's full load current

↓ ↓

Three-phase load / Single-phase load

↓ ↓ For applications in a single-phase circuit, connect the 3-pole in series

Select the rated current of MMS

↓

Select the branch circuit cable & confirm the control panel specifications

↓

Confirm the short-circuit current of the circuit

↓

Select the operating characteristics

↓ Same characteristics as desired for a standard thermal overload relay

↓ Long-time operating type or quick operating type thermal overload relay desired

Adjustable thermal magnetic trip type MMS

Instantaneous trip type MMS

Solution by using MMS

Typical Problem in the Conventional System and their Solution by using MMS

Short-Circuit Breaking Capacity

When numerous small and medium motor loads exist in a circuit requiring high breaking capacity, there is no high breaking capacity circuit breaker with a small rated current for a short circuit protection.

The MMS can be used in 100kA short circuit current circuits for three-phase, 240V motors with rated capacity upto 15kW, and in 50kA short circuit current circuits for three phase, 415V motors with rated capacity up to 30kW.

Back-up Breaking System

When back-up MCCB is installed upstream to solve the problem described in " Short-circuit breaking protection " above, a short in one of the load circuits also trips the upstream breaker and stops the other operating circuits.

Despite their compact size, the MMS provides high-performance short-circuit current breaking. They eliminate the need for an upstream circuit breaker for back-up use.

Overload Protection

Motor Protection breakers cannot be adjusted to match the rated current of the motor being protected. Equipped with a wide range current adjustment dial (with maximum/minimum ratio of 1.4 to 1.6), the MMS easily adjusts to match the rated current of the motor, for optimum protection.

Control Panel Size

Considerable space is required to install a back-up circuit breaker or a combination starter consisting of a circuit breaker and a thermal overload relay. As a result, the panel size has to be increased.The compact size of the MMS, including overload relay functions, enables a smaller installation area with less wiring space, for a reduction in panel size.



Problem with Co-ordination of Contactors & Overload Relays with MCBs

Basics of Type 1 and Type 2 Co-ordination

As per the standard two types of co-ordination are permissible, Type "1" and "2".

Type "1" co-ordination requires that under short-circuit conditions; the contactor or the starter shall cause no danger to persons or installation. The motor feeder may not be suitable for further service without repair and replacement of parts (Not remaining suitable is NOT a requirement and hence you may find separating in a different sentence could avoid possibility of misconception)

Type "2" co-ordination requires that under short-circuit conditions; the contactor or the starter shall cause no danger to persons or installation and shall be suitable for further use. However contact welding is recognized. Also the time-current characteristics of the over load protection device should not change. **This in other words means safety, low down time and continued protection.**

Types of MCBs

The Classes of MCBs and the corresponding magnetic settings are tabulated below:

Curve Type	Magnetic setting (Multiples of In)
B	3-5 times
C	5-10 times
D	10-20 times

C MCBs are popularly used for Motor protection applications

Main problem while using an MCB for Motor protection

Unlike a Fuse unit the MCB is a peak sensing device. While providing SC protection to the motor it is imperative that the MCB does not trip on the starting transients of the motor. This care has to be taken while selecting the rating of the MCB. These transients are usually of the tune of 12 times the full load current.

Now suppose a C curve MCB is selected, in order to ensure it does not trip during the starting of the motor, 12 times the motor full load current should be lesser than 5 times the MCB's nominal current

For e.g.: for a Motor having a full load current of 6 A, 12 x 6 = 72A (starting current), a C curve MCB of rating = 72/5 = 14.5, i.e. 15A will have to be selected.
Select a 6A AC3 rated contactor and a relay having a range of 4-6 ASuppose a fault occurs and the motor starts drawing a current of 60A, The MCB will not trip as 60A is lesser than 15 x 5 = 75A. As a result the overload relay will have to give a trip signal to the contactor to break this current.

The IEC standard specifies the breaking capacity of a contactor to be 8 times its AC3 rating. 60 A is greater than 8 x 6 = 48A as a result the contactor will get damaged. This problem can be rectified by de-rating the contactor.

The second more serious problem can be described by considering the below case:

Consider a 0.16 hp motor with a Full load current of 0.45A. The initial starting current will be around 5.4A. As in the earlier case a C curve MCB of 2A will have to be selected. With proper de-rating, an 18A Contactor is selected with a relay having rating of 0.3 - 0.5A.

Now in this case, the crossover between the relay and the MCB will take place at 5 x 2 = 10A which is 20 times the upper limit of the relay. This will cause permanent damage to the relay. There is no solution to this problem as de rating a relay is not possible.

This is type 1 Co-ordination and not type 2

Suppose a D curve MCB is selected, then for the above case, a 72/10= 7.2 A i.e. an 8 A MCB will have to be selected. Now the MCB has to trip for currents between 10-20 times its nominal current. For the worst case in which the MCB trips at 20 times (i.e. 160A), for a fault current of 140A, the overload relay will have to give a tripping command to the MCB and there will be similar consequences as in the previous case.

Thus in conclusion; while selecting an MCB for motor protection which may be a cost effective solution, one must be fully aware of the possible damages that might be caused to the contactor and overload relay.

We recommend that if a customer wants fuseless protection for a feeder, MMS be used

Technical Details





Type		MOG - S1		MOG - H1	
Standards / Approval		IEC 60947 -1, -2, -4 -1		IEC 60947 -1, -2, -4 -1	
Handle type		Rocker		Rotary	
Number of poles		3		3	
Frame size available (upto A)		32 A		32 A	
Rated insulation voltage (U_i)		690 V		690 V	
Rated operational voltage (U_e)		200-690V		200-690V	
Rated impulse withstand voltage (U_{imp})		6 kV		6 kV	
Rated frequency		50/60Hz		50/60Hz	
Class of protection		10		10	
Utilization category (IEC947 - 4 - 1 / 947 - 2)		AC - 3 / Cat. A		AC-3/Cat.A	
Maximum motor capacity AC3		7.5 kW (at 200 - 240 V), 15 kW (at 380 - 440 V)		7.5 kW (at 200 - 240 V), 15 kW (at 380 - 440 V)	
AC3 Electrical/Mechanical endurance		100000 (32A:70000)/100000 (32A:70000),(25 cycles/hour)		100000(32A:70000) /100000 (32A:70000), (25 cycles /hour)	
Tripping device		Thermal - Magnetic		Thermal - Magnetic	
Ambient temperature compensation		-5°C~+ 55°C		-5°C ~ + 55°C	
Storage Temperature		-40°C to 65°C		-40°C to 65°C	
Overload		Yes (according to IEC60947 - 4 - 1)		Yes (according to IEC60947 - 4 - 1)	
Phase loss protection		Yes		Yes	
Trip indicator		Yes		Yes	
Test trip function		Yes		Yes	
Instantaneous trip current		13 x Ie max.		13 x Ie max.	
Terminal type		Screw terminal, M4 slotted		Screw terminal, M4 slotted	
Wire size	Solid/Stranded	1 -10mm^2 x 1 /18-8 AWG x 1		1 -10mm^2 x 1 /18-8 AWG x 1	
	Without / With end sleeve	1 -6 mm^2 x 2 /18-10 AWG x 2		1 -6 mm^2 x 2 /18-10 AWG x 2	
Product weight (Kg)		0.35		0.35	
Dimensions (mm) W x H x D		45 x 90 x 66		45x 90x 79	
Standard service condition	Relative humidity	45~85%Rh	No dew formation or freezing due to rapid temperature change allowed	45~85%Rh	No dew formation or freezing due to rapid temperature change allowed
	Operation altitude	Upto 2000 m		Upto 2000 m	
	Atmosphere	Atmosphere having no excess Vapour, Steam, Dust,Corrosive gas, Salt, Flammable gas		Atmosphere having no excess Vapour, Steam, Dust,Corrosive gas, Salt, Flammable gas	

Technical Details







MOG - H2	MOG - H1M	MOG - H2M
IEC 60947 -1, -2, -4 -1	IEC 60947 -1, -2, -4 -1	IEC 60947 -1, -2, -4 -1
Rotary	Rotary	Rotary
3	3	3
63 A	32 A	63 A
1000V	690 V	1000 V
200-690V	200-690V	200-690V
8 kV	6 kV	8 kV
50/60Hz	50/60Hz	50/60Hz
10	10	10
AC-3/Cat.A	AC-3/Cat.A	AC-3/Cat.A
15 kW (at 200 - 240 V), 30 kW (at 380 - 440 V)	7.5 kW (at 200 - 240 V), 15 kW (at 380 - 440 V)	15 kW (at 200 - 240 V), 30 kW (at 380 - 440 V)
25000 / 50000, (25 cycles / hour)	100000(32A:70000)/100000(32A:70000),(25 cycles/hour)	25000 / 50000, (25 cycles / hour)
Thermal - Magnetic	Magnetic	Magnetic
-5°C~+55°C	-5°C~+55°C	-5°C~+55°C
-40°C to 65°C	-40°C to 65°C	-40°C to 65°C
Yes (according to IEC60947 - 4 - 1)	None	None
Yes	Yes	Yes
Yes	Yes	Yes
Yes	Yes	Yes
13 x Ie max.	13x Ie max.	13x Ie max.
Box terminal, M6 slotted	Screw terminal, M4 slotted	Box terminal, M6 slotted
1 - 25 mm^2 x 1 / 18 - 4 AWG x 1	1 - $mm^2$10 x 1 / 18 - 8 AWG x 1	1 -25mm^2 x 1 / 18 -4 AWG x 1
1 - 16 mm^2 x 2 / 18 - 4 AWG x 2	1 - 6 mm^2 x 2 18 / - 10 AWG x 2	1 -16mm^2 x 2 / 18 -4 AWG x 2
0.78	0.37	0.78
55x 110x 96	45 x 90 x 79	55 x 110x 96
45 ~ 85% Rh / No dew formation or freezing due to rapid temperature change allowed	45~85%Rh / No dew formation or freezing due to rapid temperature change allowed	45~85%Rh / No dew formation or freezing due to rapid temperature change allowed
Upto 2000 m	Upto 2000 m	Upto 2000 m
Atmosphere having no excess Vapour, Steam, Dust,Corrosive gas, Salt, Flammable gas	Atmosphere having no excess Vapour, Steam, Dust,Corrosive gas, Salt, Flammable gas	Atmosphere having no excess Vapour, Steam, Dust,Corrosive gas, Salt, Flammable gas

Breaking Capacity at Different Voltages

MOG - S1

Rating	Ie: Min - Max (A)	240 V AC 230 V AC		415 V AC 400 V AC		460 V AC 440 V AC		500 V AC		690 V AC 600 V AC	
		Icu (kA)	Ics (kA)	Icu (kA)	Ics (kA)	Icu (kA)	Ics (kA)	Icu (kA)	Ics (kA)	Icu (kA)	Ics (kA)
0016	0.1 - 0.16	100	100	100	100	100	100	100	100	100	100
0025	0.16 - 0.25	100	100	100	100	100	100	100	100	100	100
0040	0.25 - 0.4	100	100	100	100	100	100	100	100	100	100
0063	0.4 - 0.63	100	100	100	100	100	100	100	100	100	100
0100	0.63 - 1	100	100	100	100	100	100	100	100	100	100
0160	1 - 1.6	100	100	100	100	100	100	100	100	100	100
0250	1.6 - 2.5	100	100	100	100	100	100	100	100	3	2
0400	2.5 - 4	100	100	100	100	100	100	100	100	3	2
0630	4 - 6.3	100	100	100	100	50	38	50	38	3	2
1000	6.3 - 10	100	100	100	100	15	11	10	8	3	2
1300	9 - 13	100	100	50	38	10	8	6	5	3	2
1600	11 - 16	100	100	25	19	10	8	6	5	3	2
2000	14 - 20	50	38	25	19	10	8	6	5	3	2
2500	19 - 25	50	38	25	19	10	8	6	5	3	2
3200	24 - 32	50	38	25	19	10	8	6	5	3	2

MOG - H1 and MOG - H1M

Rating	Ie: Min - Max (A)	240 V AC 230 V AC		415 V AC 400 V AC		460 V AC 440 V AC		500 V AC		690 V AC 600 V AC	
		Icu (kA)	Ics (kA)	Icu (kA)	Ics (kA)	Icu (kA)	Ics (kA)	Icu (kA)	Ics (kA)	Icu (kA)	Ics (kA)
0016	0.1 - 0.16	100	100	100	100	100	100	100	100	100	100
0025	0.16 - 0.25	100	100	100	100	100	100	100	100	100	100
0040	0.25 - 0.4	100	100	100	100	100	100	100	100	100	100
0063	0.4 - 0.63	100	100	100	100	100	100	100	100	100	100
0100	0.63 - 1	100	100	100	100	100	100	100	100	100	100
0160	1 - 1.6	100	100	100	100	100	100	100	100	100	100
0250	1.6 - 2.5	100	100	100	100	100	100	100	100	8	6
0400	2.5 - 4	100	100	100	100	100	100	100	100	8	6
0630	4 - 6.3	100	100	100	100	100	100	100	100	6	5
1000	6.3 - 10	100	100	100	100	50	38	50	38	6	5
1300	9 - 13	100	100	100	100	50	38	42	32	6	5
1600	11 - 16	100	100	50	38	35	27	10	8	4	3
2000	14 - 20	100	100	50	38	35	27	10	8	4	3
2500	19 - 25	100	100	50	38	35	27	10	8	4	3
3200	24 - 32	100	100	50	38	35	27	10	8	4	3

MOG - H2 and MOG - H2M

Rating	Ie: Min - Max (A)	240 V AC 230 V AC		415 V AC 400 V AC		460 V AC 440 V AC		500 V AC		690 V AC 600 V AC	
		Icu (kA)	Ics (kA)	Icu (kA)	Ics (kA)	Icu (kA)	Ics (kA)	Icu (kA)	Ics (kA)	Icu (kA)	Ics (kA)
3200	24 - 32	100	100	50	38	35	27	10	8	5	4
4000	28 - 40	100	100	50	38	35	27	10	8	5	4
5000	35 - 50	100	100	50	38	35	27	10	8	5	4
6300	45 - 63	100	100	50	38	35	27	10	8	5	4

Ordering Information

Thermal & Magnetic Trip - Rocker Type

Frame size (mm)	Rating (A)	Motor Rating at 415 V, 50 Hz (kW)	Type Designation	Thermal Release Range (A)	Cat. Nos.	Breaking Capacity
45 mm	0.16	-	MOG - S1	0.1 - 0.16	ST418890000	100 kA
	0.25	-		0.16 - 0.25	ST418900000	
	0.4	0.09		0.25 - 0.4	ST418910000	
	0.63	0.12		0.4 - 0.63	ST418920000	
	1	0.25		0.63 -1	ST418930000	
	1.6	0.55		1 - 1.6	ST418940000	
	2.5	0.75		1.6 - 2.5	ST418950000	
	4	1.5		2.5 - 4	ST418960000	
	6.3	2.2		4 - 6.3	ST418970000	
	10	4		6.3 - 10	ST418980000	
	13	5.4		9 - 13	ST418990000	50 kA
	16	7.5		11 - 16	ST419000000	25 kA
	20	9		14 - 20	ST419010000	
	25	12.5		19 - 25	ST419020000	
	32	15		24 - 32	ST419030000	

Thermal & Magnetic Trip - Rotary Type

Frame size (mm)	Rating (A)	Motor Rating at 415 V, 50 Hz (kW)	Type Designation	Thermal Release Range (A)	Cat. Nos.	Breaking Capacity
45 mm	0.16	-	MOG - H1	0.1 - 0.16	ST419040000	100 kA
	0.25	-		0.16 - 0.25	ST419050000	
	0.4	0.09		0.25 - 0.4	ST419060000	
	0.63	0.12		0.4 - 0.63	ST419070000	
	1	0.25		0.63 - 1	ST419080000	
	1.6	0.55		1 - 1.6	ST419090000	
	2.5	0.75		1.6 - 2.5	ST419100000	
	4	1.5		2.5 - 4	ST419110000	
	6.3	2.2		4 - 6.3	ST419120000	
	10	4		6.3 - 10	ST419130000	
	13	5.4		9 - 13	ST419140000	
	16	7.5		11 - 16	ST419150000	50 kA
	20	9		14 - 20	ST419160000	
	25	12.5		19 - 25	ST419170000	
	32	15		24 - 32	ST419180000	
55 mm	32	15	MOG - H2	24 - 32	ST419190000	
	40	20		28 - 40	ST419200000	
	50	25		35 - 50	ST419210000	
	63	34		45 - 63	ST419220000	

Instantaneous Trip - Rotary Type

Frame size (mm)	Rating (A)	Motor Rating at 415 V, 50 Hz (kW)	Type Designation	Instantaneous Trip Current (A)	Cat. Nos.	Breaking Capacity
45 mm	0.16	-	MOG - H1M	2.1	ST419230000	100 kA
	0.25	-		3.3	ST419240000	
	0.4	0.09		5.2	ST419250000	
	0.63	0.12		8.2	ST419260000	
	1	0.25		13	ST419270000	
	1.6	0.55		20.8	ST419280000	
	2.5	0.75		32.5	ST419290000	
	4	1.5		52	ST419300000	
	6.3	2.2		81.9	ST419310000	
	10	4		130	ST419320000	
	13	5.4		169	ST419330000	
	16	7.5		208	ST419340000	
	20	9		260	ST419350000	
	25	12.5		328	ST419360000	
	32	15		416	ST419370000	
55 mm	32	15	MOG - H2M	416	ST419380000	50 kA
	40	20		520	ST419390000	
	50	25		650	ST419400000	
	63	34		819	ST419410000	

Accessories

Features

- All accessories can be used with MOG S1 (45 mm wide), MOG H1 (45 mm wide) and MOG H2 (55 mm wide) frames
- Shunt trip and undervoltage trip devices are available in a wide range of operating voltages
- IP20 terminal cover prevents accidental contact to electrically charged parts

Auxiliary Contact Blocks : MOG-AXF, MOG-AXL

These blocks are linked to the ON/OFF operation of the MMS. Upto two contact blocks can be mounted to the right/left front and upto two contact blocks can be mounted to the left side.

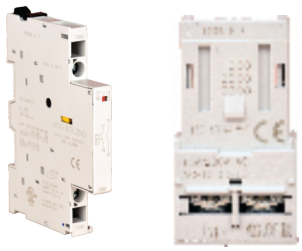

Alarm Contact Blocks : MOG-TAF

This block operates when the MMS trips due to overload, phase-loss, or short-circuit. It is not linked to the ON/OFF operation of the MMS.

Note : Operation can be checked with the test trip function.



Auxiliary and Alarm Contact Blocks : MOG-ATL

- This contact block combines auxiliary contact and alarm contact that operate in the event of an overload, phase loss, or short-circuit. Alarm contact is not linked to the ON/OFF operation of the MMS
- An alarm is displayed in the contact block's indicator when the alarm contact operates

Note : Operation can be checked with the test trip function.



Short-circuit Alarm Contact Block : MOG-SAL

- The contacts operate only when the MMS has tripped due to a short-circuit
- When these contacts operate, the blue reset button extends out, and a trip indication is displayed
- The power to the MMS can be turned ON after pressing the reset buttonNote : Operation can not be checked with the test trip function. Be sure to press the reset button before mounting to the MMS.



Shunt Trip Devices : MOG-ST

This device is used to remotely trip the MMS.

Notes:

- This device cannot be used together with an undervoltage trip device
- When the MMS trips with the shunt trip device, press the reset button before turning ON the power



Accessories

Undervoltage Trip Devices : MOG-UV

This device automatically trips the MMS when the control circuit voltage drops below the specified value.

Notes:

- This device cannot be used with a shunt trip device
- When the MMS has been tripped by undervoltage trip device, press the reset button before turning ON the power



External Operating Handles : MOG-EH

- To operate the MMS without opening the panel door
- Equipped with an interlock mechanism that prevents someone from opening the panel door when the MMS is in the ON state
- The shaft can be cut to match the distance between the MMS and the panel door
- Door interlock function
- OFF lock function

Notes: Padlocks not included.

- Release screw allows the door to be opened with the handle in the ON position
- IP54 enclosure



9mm External device Left side mounting	Internal device Front mounting	MMS	mounting Front device Internal	18mm External device Right side mounting

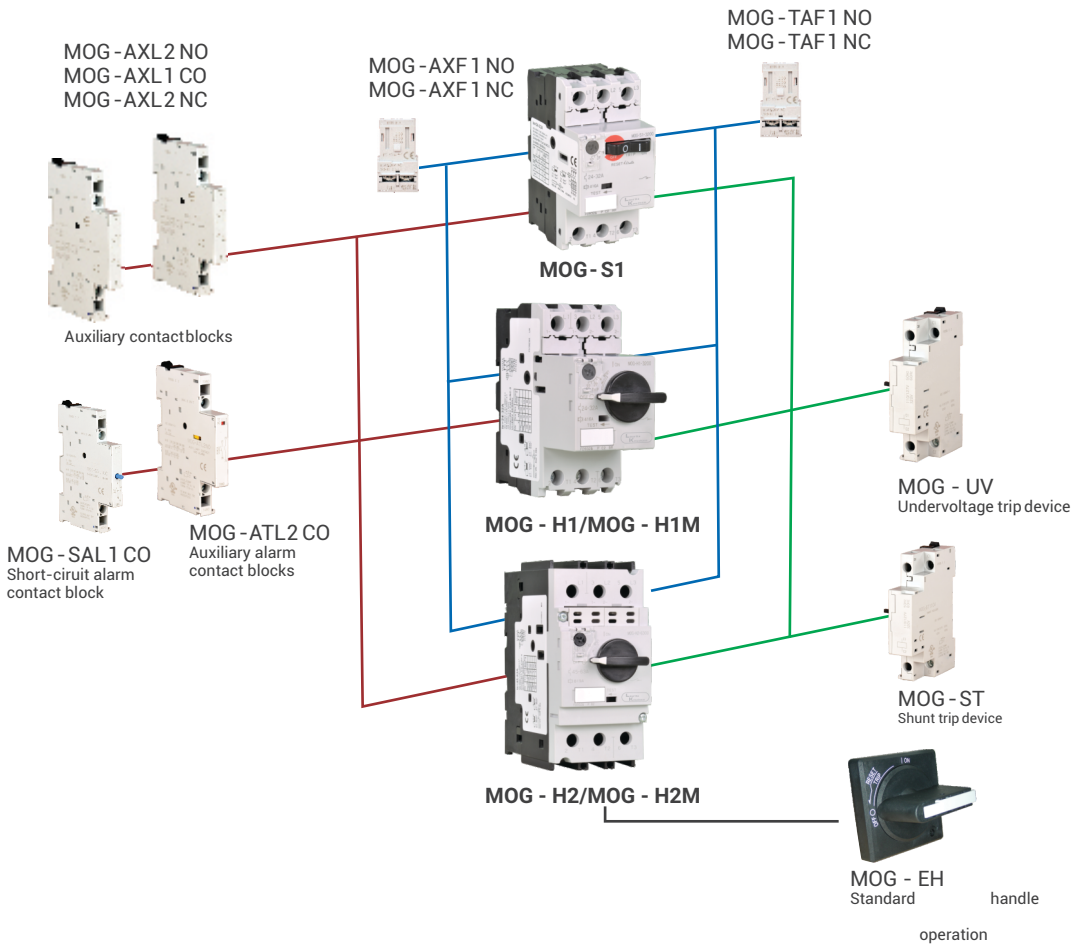

Accessories

Cat. Nos.	Description	Model Numbers	Position	Terminal Marking	
				NO	NC
ST419420000	Auxiliary Contact Front mtg. 1NO	MOG-AXF 1NO	F (Slot1 / Slot 2)	13, 14 (23, 24)	
ST419430000	Auxiliary Contact Front mtg. 1NC	MOG-AXF 1NC	F (Slot1 / Slot 2)		11, 12 (21, 22)
ST419440000	Auxiliary Contact Left side mtg. 2NO	MOG-AXL 2NO	L	"33, 34 (133, 134) 43, 44 (143, 144)"	
ST419450000	Auxiliary Contact Left side mtg. 1NO + 1NC	MOG-AXL 1CO	L	43, 44 (143, 144)	31, 32 (131, 132)
ST419460000	Auxiliary Contact Left side mtg. 2NC	MOG-AXL 2NC	L		"31, 32 (131, 132) 41, 42 (141, 142)"
ST419470000	Trip Alarm Contact Front mtg. 1NO	MOG-TAF 1NO	F (Slot 2 only)	27, 28	
ST419480000	Trip Alarm Contact Front mtg. 1NC	MOG-TAF 1NC	F (Slot 2 only)		25, 26
ST419490000	Auxiliary + Alarm Left side mtg. 2NO	MOG-ATL 2NO	L	"73, 74(Aux) 77, 78"(Alarm)	
ST419500000	Short circuit alarm Left side mtg. 1NO + 1NC	MOG-SAL 1CO	L	87, 88	85, 86
ST419510000	Shunt trip 24 V DC	MOG-ST	R (one at a time)	C1, C2	
ST419520000	Shunt trip 110 V, 50 Hz	MOG-ST			
ST429520000	Shunt trip 230 V, 50 Hz	MOG-ST			
ST419530000	Under Voltage release, 110 V, 50 Hz	MOG-UV		D1, D2	
ST419540000	Under Voltage release, 415 V, 50 Hz	MOG-UV			

F- Front Mounting L - LHS Mounting R - RHS Mounting

Note:

1) On LHS any 2 accessories can be fitted (Alarm contact followed by Auxiliary contact)
   + MOG - ATL 2NO + MOG-AXL 1CO MOG-SAL 1CO + MOG-AXL 1CO
2) On RHS only 1 accessory can be fitted (Shunt trip release or Undervoltage release)
3) Any 2 Front mounted accessories are possible at a time
   + Front mounted TAF to be fitted only in slot 2 + Front mounted auxiliary contact can be fitted in slot1 / slot 2

Ratings of Accessories

Accessory type		Auxiliary contact block /front	Auxiliary contact block/side	Alarm contact block	Aux. and alarm contact block	Short-circuit alarm contact block
Part number		MOG-AXF	MOG-AXL	MOG-TAF	MOG-ATL	MOG-SAL
Standard		IEC 60947-5-1				
Rated operational current (A)	48 V AC AC-15	5	6	5	6	6
	125 V AC	3	4	3	4	4
	230 V AC	1.5	4	1.5	4	4
	400 V AC	-	2.2	-	2.2	2.2
	500 V AC	-	1.5	-	1.5	1.5
	690 V AC	-	0.6	-	0.6	0.6
	48 V DC DC-13	1.38	5	1.38	5	5
	110 V DC	0.55	1.3	0.55	1.3	1.3
	220 V DC	0.27	0.5	0.27	0.5	0.5
Min. voltage and current		17 V, 5 mA				

Accessory type		Shunt trip device MOG-ST	Undervoltage device MOG-UV
Standard		IEC 60947-1	
Rated insulationvoltage (V AC)		690	
No. of operations		5000	
Operating time (ms)		20	
Power consumption	Inrush (VA/W)	21/12	
	Sealed (VA/W)	8/1.2	
Voltage range	Tripping voltage (V)	0.7 to 1.1Ue	0.35 to 0.7Ue
	Closing voltage (V)	-	0.85 to 1.1Ue
Time rating of coil (s)		AC: Continuous DC: 5	AC: Continuous

Note: Ue: Rated Voltage

Accessories

Accessory	Used with	Specification	Description	Cat. No.
Busbar Simple power supply for 2 to 5 MMSs without the need for wiring 	MOG S1/H1/H1M	Rated current: 64A max Pin connection	2 MMS without accessory	ST419570000
			3 MMS without accessory	ST419580000
			4 MMS without accessory	ST419590000
			5 MMS without accessory	ST419600000
			2 MMS with one accessory 9 mm	ST419610000
			3 MMS with one accessory 9 mm	ST419620000
			4 MMS with one accessory 9 mm	ST419630000
			5 MMS with one accessory 9 mm	ST419640000
	MOG H2/H2M	Rated current: 126A max Pin connection	2 MMS without accessory	ST419660000
			3 MMS without accessory	ST419670000
			4 MMS without accessory	ST419680000
			2 MMS with one accessory 9 mm	ST419690000
			3 MMS with one accessory 9 mm	ST419700000
			4 MMS with one accessory 9 mm	ST419710000
			2 MMS with two accessories 9mm or one accessory 18 mm	ST419720000
			4 MMS with two accessories 9mm or one accessory 18 mm	ST419730000
3 Phase Feed in terminal Used to connect the wire for the power supply circuit 	MOG S1/H1/H1M	Rated current: 64A	Feed in terminal for 45 mm width	ST419650000
	MOG H2/H2M	Rated current: 126A	Feed in terminal for 55 mm width	ST419740000
Busbar Safety cover Prevents contact with charged parts when part of the busbar is not connected to MMS. 	MOG S1/H1/H1M	For pin connection	Bus bar safety cover 45 mm width	ST419750000
	MOG H2/H2M	For pin connection	Bus bar safety cover 55 mm width	ST419760000

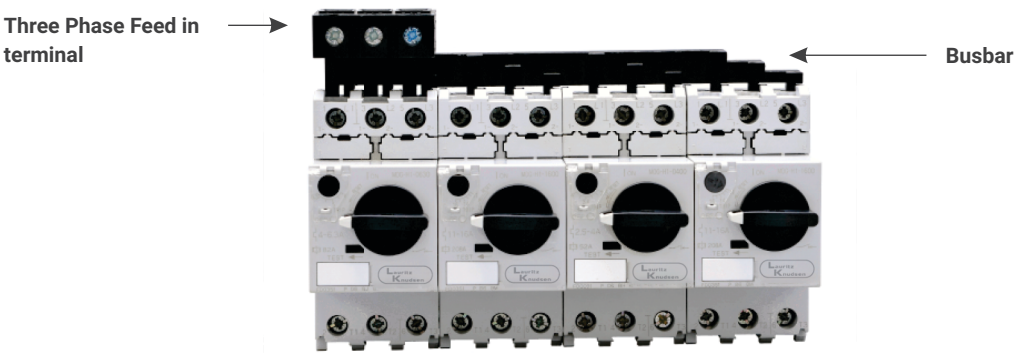

4 MMSs with busbar connection

I-T Characteristics

Type MOG - S1 (0.16A - 32A)

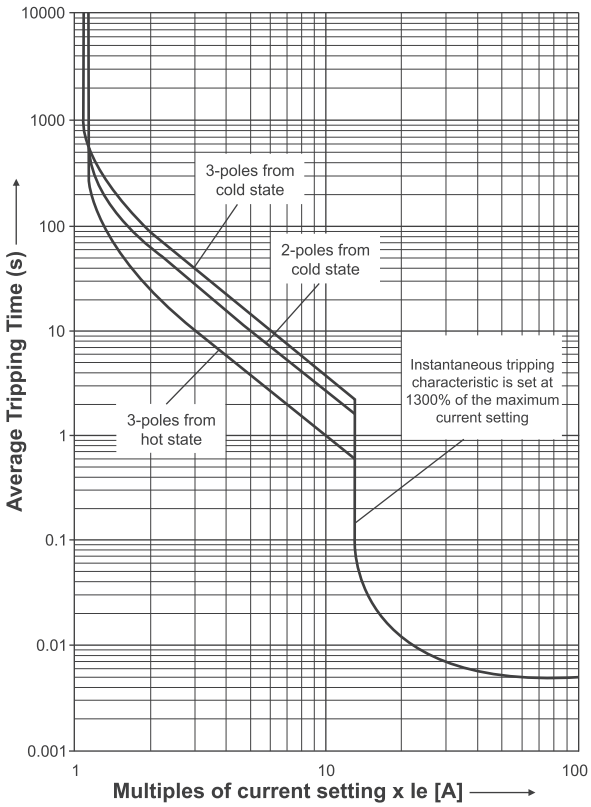

Type MOG - H1 (0.16A - 32A)

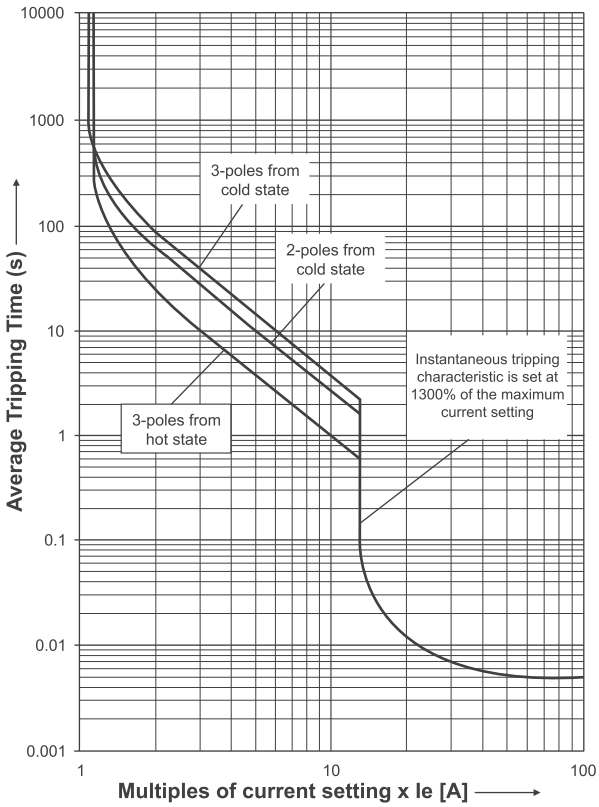

Type MOG - H2 (32A - 63A)

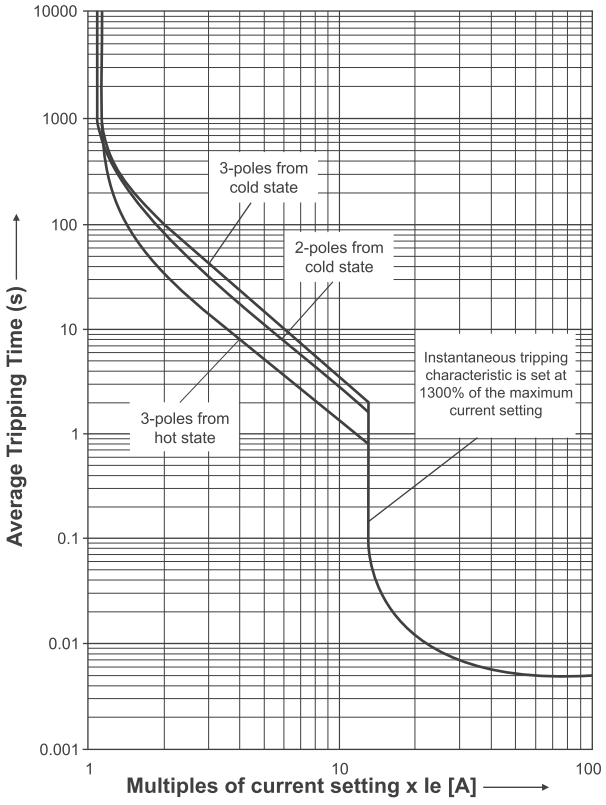

I-T Characteristics

Type MOG - H1M (0.16A - 32A)

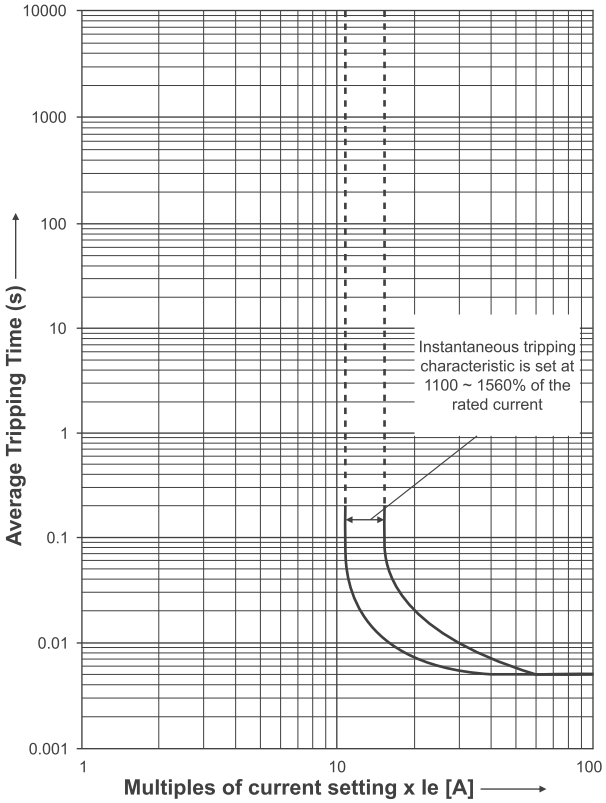

Type MOG - H2M (32A - 63A)

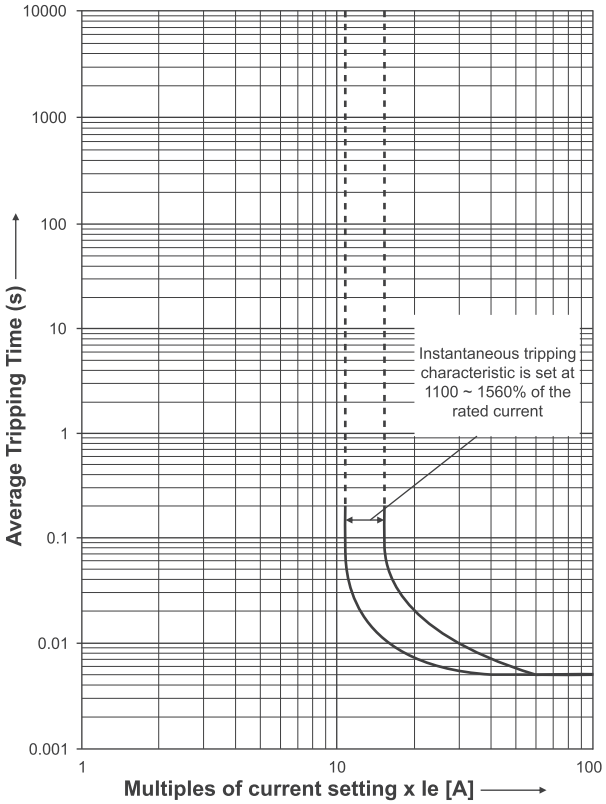

Overall Dimensions

Type MOG - S1 (0.16A - 32A)

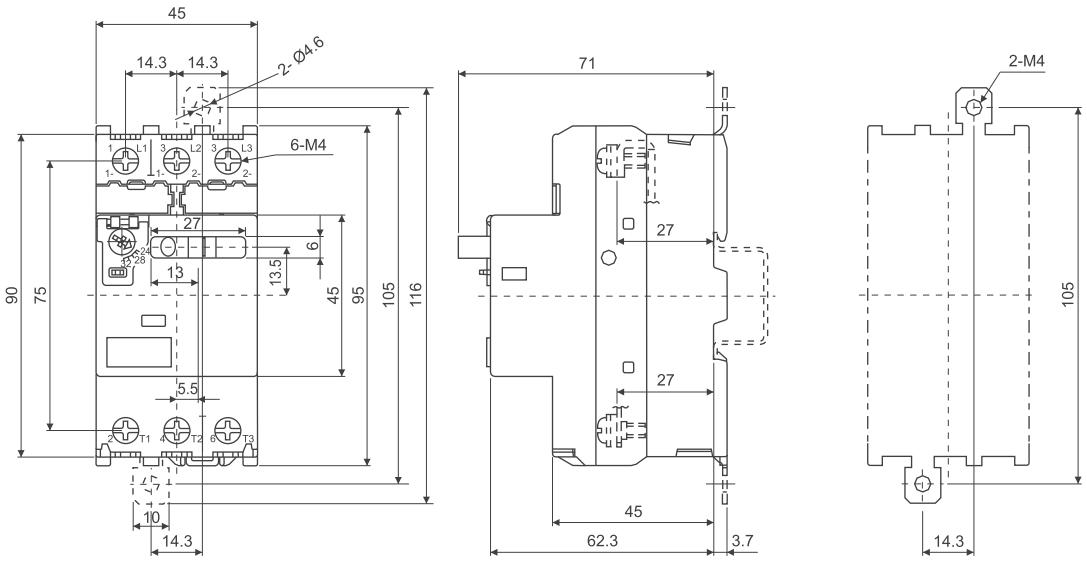

Type MOG - H1 & MOG - H1M (0.16A - 32A)

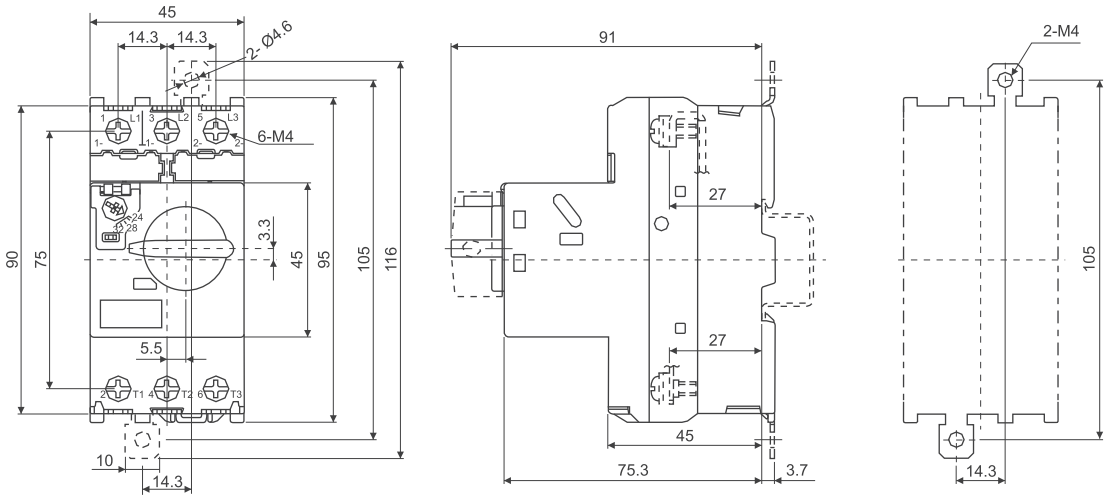

Type MOG - H2 & MOG - H2M (32A - 63A)

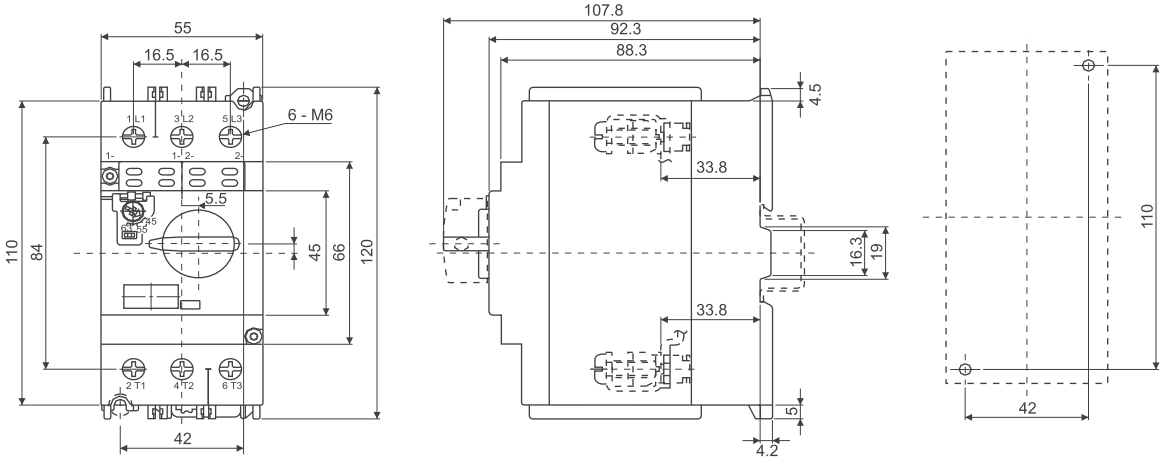

All dimensions in mm.

Overall Dimensions

Trip Alarm Contact Front 1 NO

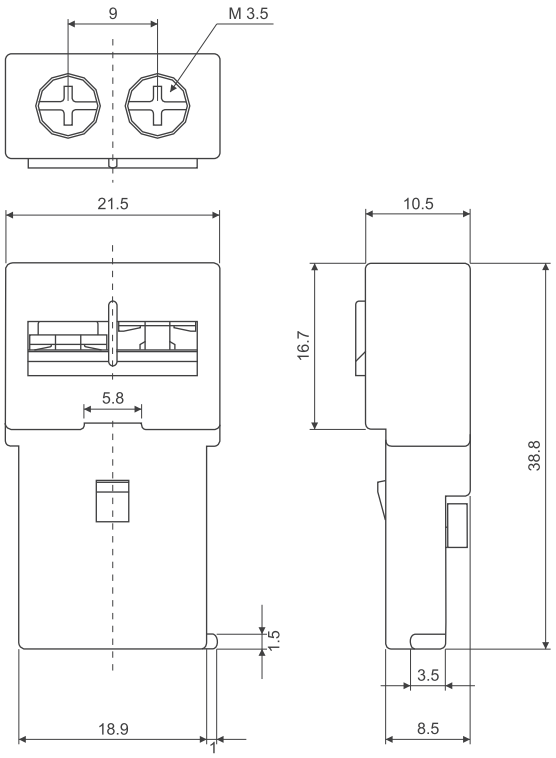

MOG - TAF 1 NO

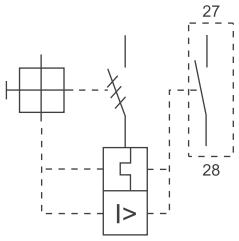

MOG - TAF 1 NC

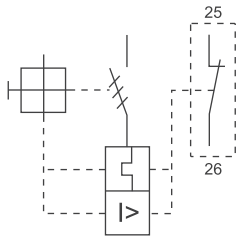

S/C Alarm Left 1 NO + 1 NC

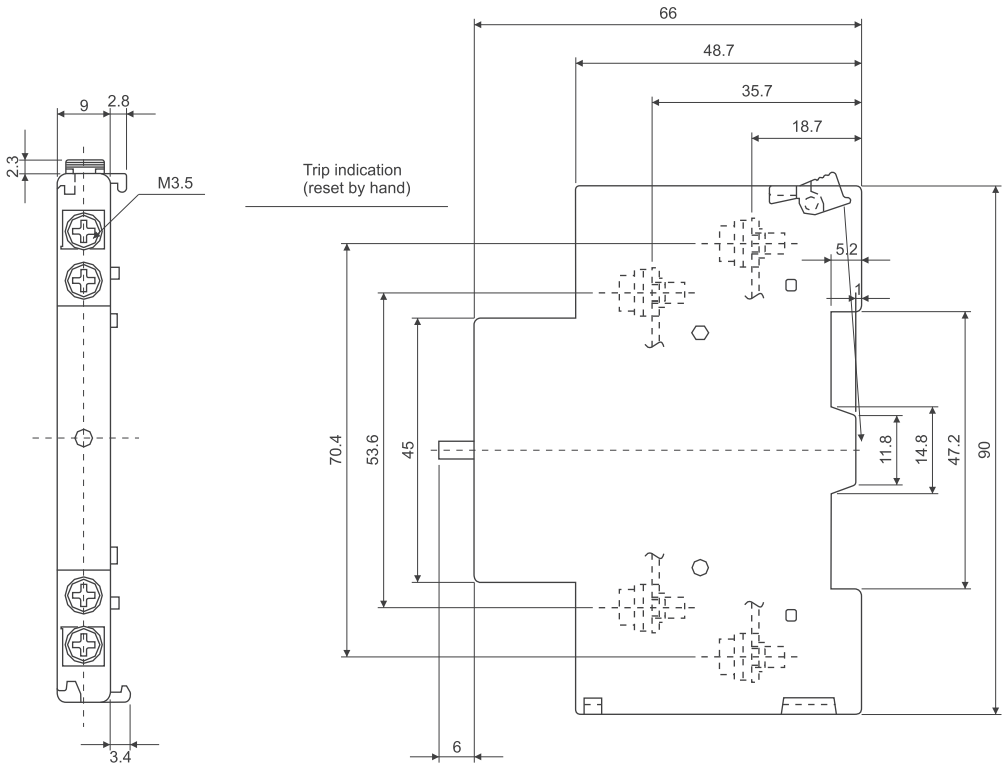

MOG - SAL 1 CO

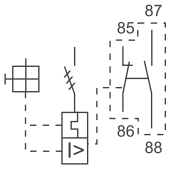

All dimensions in mm.

Overall Dimensions

External Operating Handle (Applicable for Frame 1 & 2)

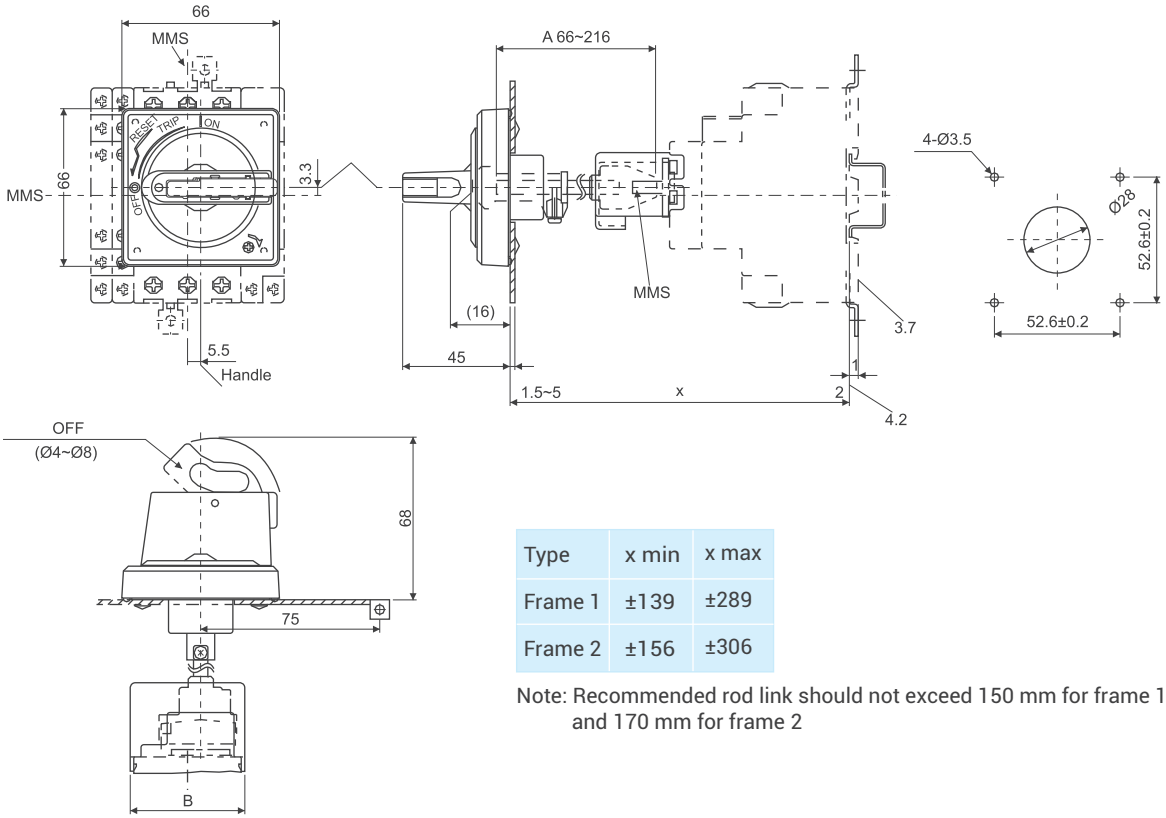

Type	x min	x max
Frame 1	±139	±289
Frame 2	±156	±306

Note: Recommended rod link should not exceed 150 mm for frame 1 and 170 mm for frame 2

Aux. Contact Front 1 NO

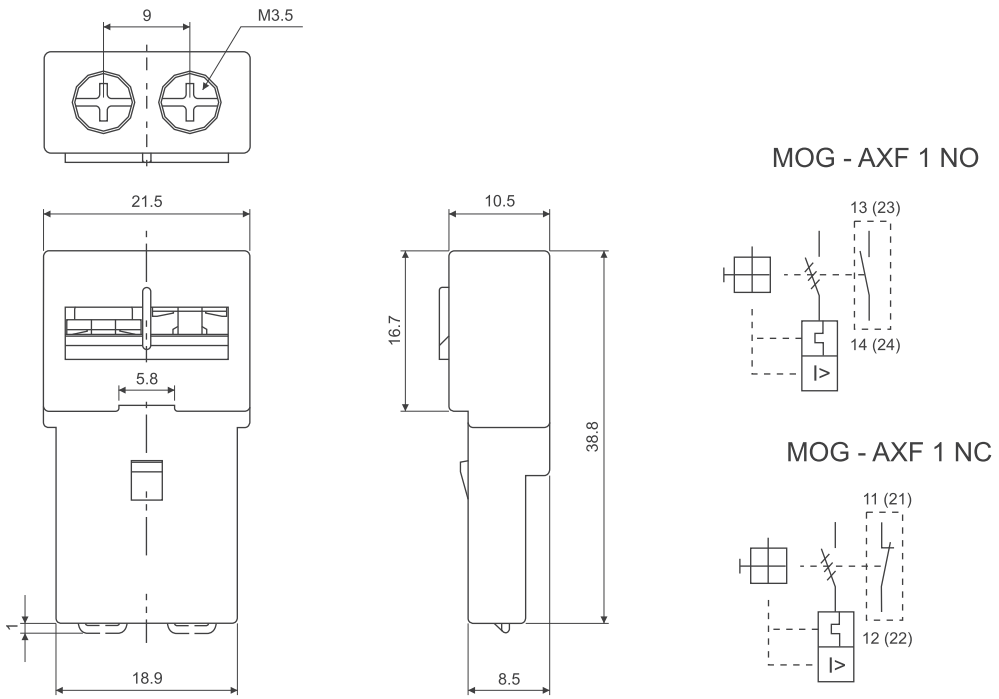

All dimensions in mm.

Overall Dimensions

Aux. Alarm Left 2 NO

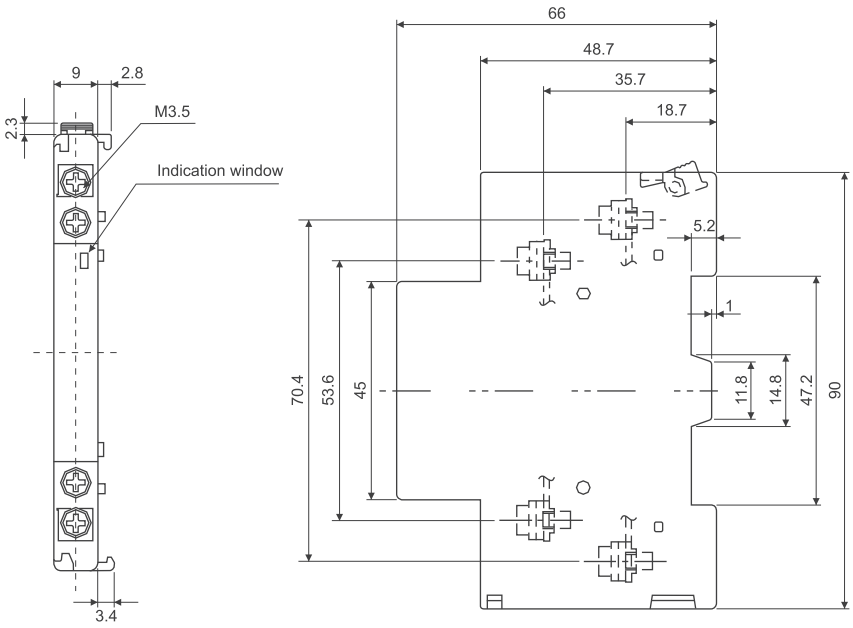

MOG - ATL 2 NO

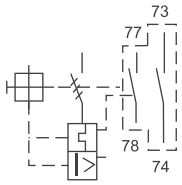

Aux. Contact Left 2 NO

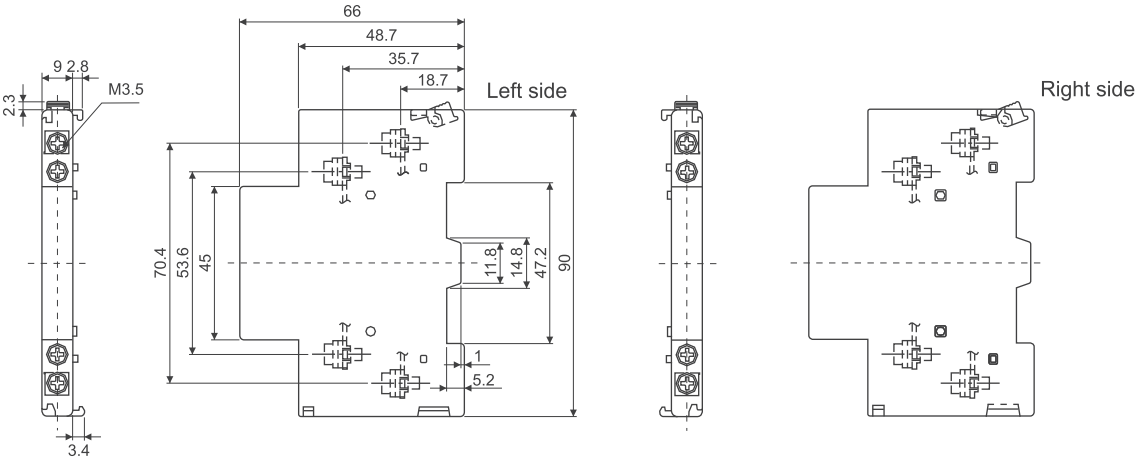

MOG - AXL 2 NO

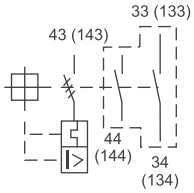

MOG - AXL 1 CO

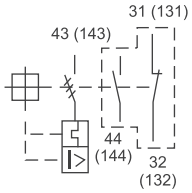

MOG - AXL 2 NC

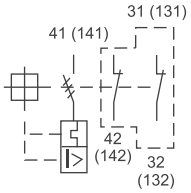

All dimensions in mm.

Overall Dimensions

Shunt Trip and under Voltage Release

MOG - ST & MOG - UV

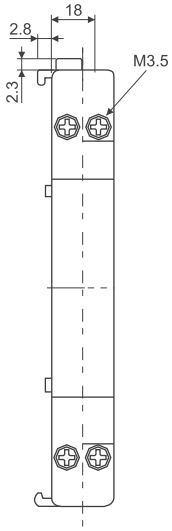

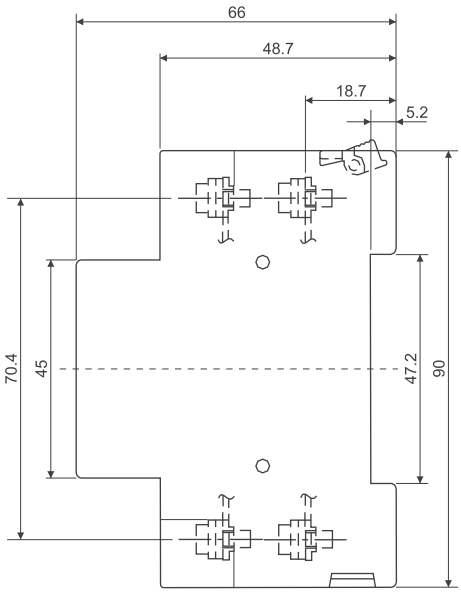

MMS Busbar Accessories

3 Phase Feed in Terminals (Frame 1)

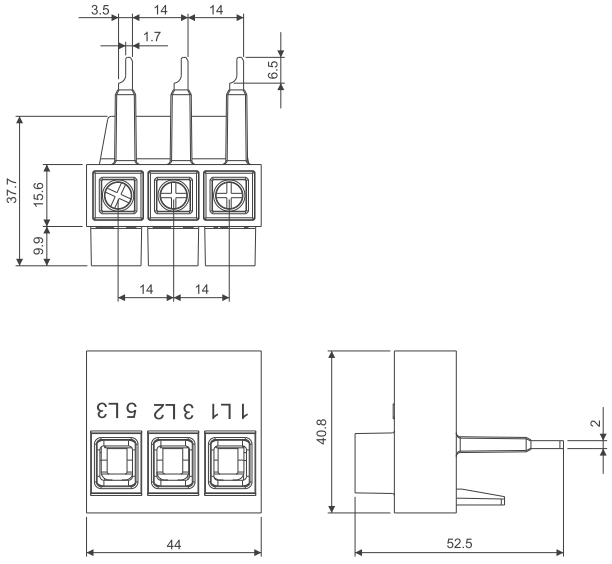

ST41965OOOO

3 Phase Feed in Terminals (Frame 2)

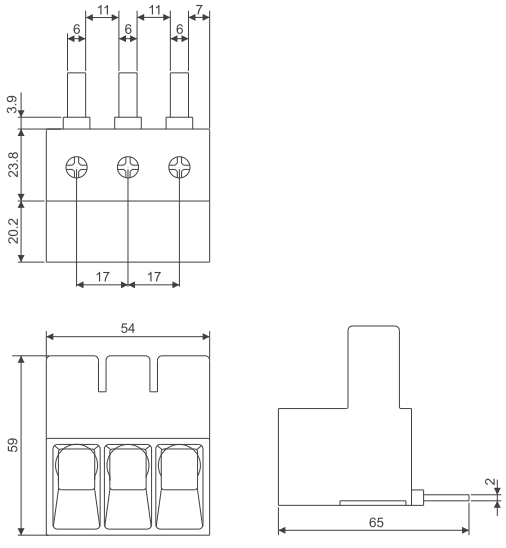

ST41974OOOO

All dimensions in mm.

Overall Dimensions

MMS Busbar Accessories

For MOG-S1, MOG-H1/H1M (Frame 1)

Without external accessory

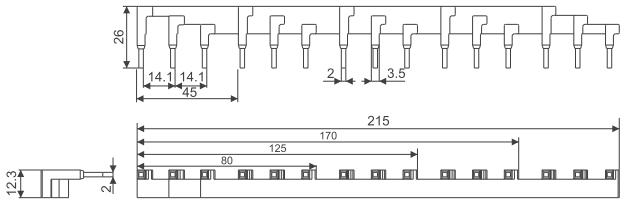

ST419570000 : 80 mm
ST419580000 : 125 mm
ST419590000 : 170 mm
ST419600000 : 215 mm

With 1 external accessory

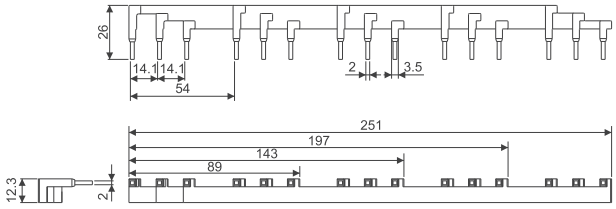

ST419610000 : 89 mm
ST419620000 : 143 mm
ST419630000 : 197 mm
ST419640000 : 251 mm

For MOG-H2/H2M (Frame 2)

Without external accessory

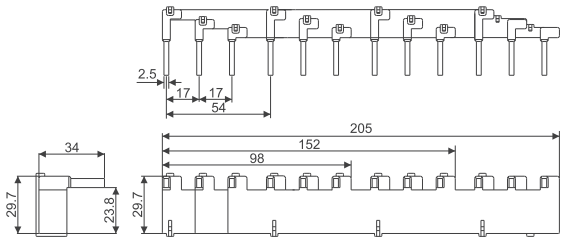

ST419660000 : 98 mm
ST419670000 : 152 mm
ST419680000 : 205 mm

With one external accessory

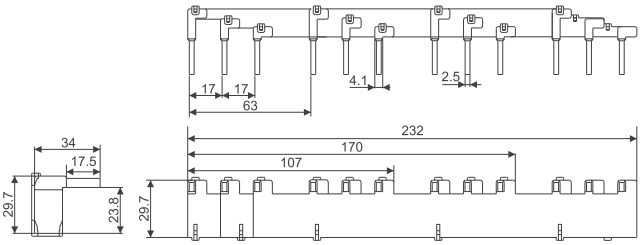

ST419690000 : 107 mm
ST419700000 : 170 mm
ST419710000 : 232 mm

With 2 external accessory, 9 mm wide
With 1 external accessory, 18 mm wide

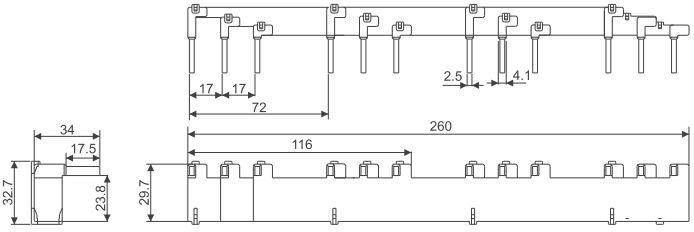

ST419720000 : 116 mm
ST419730000 : 260 mm

All dimensions in mm.





MN Industrial Starter

MN & ML range of industrial starters offers complete motor starting solution for industrial applications. These starters are time tested for reliable performance. These starters are proven work horse for stand alone motor in the industry.

Compact, Reliable & Complete Solution



Salient Features



Features & Benefits

Single Phasing Protection

MN relays having phase failure sensitive tripping mechanism provides reliable protection against single phasing & overload conditions. MN relays are compensated for variation in ambient temperature from -5 °C to 55 °C.

IP54 degree of protection

Corrosion resistant powder coated enclosure with IP 54 degree of protection makes MN starters most suitable for chemical factories, polluted industrial and dustyagricultural environments.

Terminal Block

MN Star-Delta starters are provided with terminal block with proper terminal marking for ease of wiring. Terminal block can accommodate both aluminum & copper cables.

Base Plate Mounting

MN Star-Delta starters are mounted on base plate that can absorb vibrations & it makes MN starters maintenance friendly.

Electronic Timer

MN Fully Automatic Star-Delta starters are provided with electronic timer for high repeat accuracy.

Trip Test Facility

This facility enables the user to manually check the operation of the trip mechanism. Move the trip slide in the direction shown on the relay. The relay trips with an audible 'Click' sound, indicating that the trip mechanism is in good working order.

Off / Reset Push-Button

The relay will trip in case of overloads or single phasing conditions. Simultaneously 'Alarm Contact' (97-98) will close. The motor cannot be restarted until the relay has been reset. To reset the relay, allow the bimetals to cool down sufficiently & push this button to reset the trip contact (95-96).If the relay is in reset condition, pressing this push-button will open 'Trip Contact'. But now the alarm contact will not close. This indicates healthy operation of the relay mechanism. The trip contact will again close when this button is released.

Auto-Manual Reset Switch

There are two modes of reset available : Manual and Auto. By default the relay is in the Manual reset mode and can be converted to Auto reset mode by moving the switch to Auto position marked on the label.

Technical Deatails

Chart for MN DOL starters

Type	Maximum Motor Rating at 415V, 3 Ø, 50Hz		Approx. Full Load Current In (A)	Relay Range (A)	Relay	Contactor	Recommended Back-up HRC Fuse		Switch Disconnector Fuse Unit
	HP	kW					Type	Rating (A)	
MN 16 DOL	2	1.5	3.5	3 - 5	MN 2	MNX 18	HF	16	FN 32
	2.5	1.8	4.8	3 - 5			HF	16	FN 32
	3	2.2	5	4.5 - 7.5			HF	16	FN 32
	4	3	6.2	4.5 - 7.5			HF	20	FN 32
	5	3.7	7.5	6 - 10			HF	20	FN 32
	6	4.5	9	6 - 10			HF	25	FN 32
	7.5	5.5	11	9 - 15			HF	32	FN 32
	10	7.5	14	9 - 15			HF	32	FN 32
MN 25 DOL	7.5	5.5	11	9 - 15	MN 2	MNX 25	HF	32	FN 32
	10	7.5	14	9 - 15			HF	32	FN 32
	12.5	9.3	18	14 - 23			HF	50	FN 63
	15	11	21	14 - 23			HF	63	FN 63
MN 32 DOL	15	11	21	20 - 33	MN 2	MNX 32	HF	63	FN 63
	17.5	13	24	20 - 33			HF	63	FN 63
	20	15	28	20 - 33			HN/100	63	FN 100
MN 45 DOL	25	18.5	35	30 - 50	MN 5	MNX 50	HN/100	80	FN 100
	30	22	40	30 - 50			HN/100	80	FN 100
MN 65 DOL	30	22	40	30 - 50	MN 5	MNX 70	HN/100	80	FN 100
	35	26	47	30 - 50			HN/100	100	FN 100
	40	30	55	45 - 75			HN/100	100	FN 100
	40	30	60	45 - 75			HN/100	100	FN 100

Selection Chart for MN DOL Starters

Chart for MN Star-Delta starters

Type	Maximum Motor Rating at 415V, 3 Ø, 50Hz		Approx. Full Load Current In (A)	Phase Current $I_n/\sqrt{3}$	Relay Range (A)	Relay	Contactor	Recommended Back-up HRC Fuse		Switch Disconnector Fuse Unit
	HP	kW						Type	Rating (A)	
MN 16 FASD	10	7.5	14	8.08	6 - 10	MN 2	MNX 18	HF	20	FN32
	12.5	9.3	18	10.4	9 - 15			HF	32	FN32
	15	11	21	12.1	9 - 15			HF	32	FN32
	17	13	25	24.4	9 - 15			HF	32	FN32
MN 25	20	15	28	16.2	14 - 23	MN 2	MNX 25	HF	40	FN63
	25	18.5	35	20.2	14 - 23			HF	50	FN63
MN 32 FASD	35	22.5	40	23	20 - 33	MN 2	MNX 32	HF	63	FN63
	40	30	47	27	20 - 33			HN/00	63	FN100
MN 45 FASD	40	30	55	31.8	30 - 50	MN 5	MNX 50	HN/00	63	FN100
	45	33.5	60	34.6	30 - 50			HN/00	80	FN100
	50	37	66	38.2	30 - 50			HN/00	80	FN100
MN 65 FASD	60	45	80	46.2	45 - 75	MN 5	MNX 70	HN/00	100	FN100
	65	48.5	87	50	45 - 75			HN/00	100	FN100
	70	52	94	54.5	45 - 75			HN/00	125	FN125
	75	55	100	57.5	45 - 75			HN/00	125	FN125
MN 80 FASD	90	67.5	120	69.2	45 - 75	MN 5	MNX 80	HN/0	160	FN 200
MN 110 FASD	100	75	135	77.9	66 - 110	MN 5	MNX 110	HN/0	160	FN200
	150	110	165	95	66 - 110			HN/0	200	FN200
MN 140 FASD	150	110	200	115	90 - 150	MN 12L	MNX 140	HN/1	250	FN250
	180	132	230	132.8	90 - 150			HN/1	250	FN250

Selection Chart for MN Star-Delta Starters

Technical Deatails

Ordering Information - MN DOL Starter*

Example: MN 16 DOL - 240 V with relay range 9 - 15 A Ordering Information - SS94015BOBO

Starter Type	Version	MN 16	MN 25	MN 32	MN 45	MN 65
Cat. No.		SS94351	SS94352	SS94353	SS94017	SS94018
Rated control voltage (Us) V AC	Relay Range					
240	2.0 - 3.3	DOQO	–	–	–	–
	3.0 - 5.0	–	–	–	–	–
	4.5 - 7.5	–	–	–	–	–
	6.0 - 10	–	–	–	–	–
	9.0 - 15	–	BOBO	–	–	–
	14 - 23	–	BODO	BOEO	–	–
	20 - 33	–	–	–	–	–
	30 - 50	–	–	–	–	–
	45 - 75	–	–	–	–	–
360	3.0 - 5.0	COSO	–	–	–	–
	4.5 - 7.5	COUO	–	–	–	–
	6.0 - 10	COVO	–	–	–	–
	9.0 - 15	COBO	–	–	–	–
	14 - 23	–	COBO	–	–	–
	20 - 33	–	CODO	COEO	–	–
	30 - 50	–	–	–	COGO	–
	45 - 75	–	–	–	–	COJO
415	3.0 - 5.0	DOSO	–	–	–	–
	4.5 - 7.5	DOUO	–	–	–	–
	6.0 - 10	DOVO	–	–	–	–
	9.0 - 15	DOBO	–	–	–	–
	14 - 23	–	DOBO	DODO	–	–
	20 - 33	–	DODO	DOEO	–	–
	30 - 50	–	–	–	DOGO	DOGO
	45 - 75	–	–	–	–	DOJO

Ordering Information - MN Star- Delta Starter*

Example: MN 16 SASD - 360 V with relay range 9 - 15 A Ordering Information - SS94019COBO

Starter Type	Version	MN 16	MN 25	MN 32	MN 45	MN 65	MN 80	MN 110	MN 140
Cat. No.	FASD	SS94362	SS94364	SS94366	SS94021	SS94022	SS94705	SS94706	SS94707
Rated control voltage (Us) V AC	Relay Range								
360	6.0 - 10	COVO	–	–	–	–	–	–	–
	9.0 - 15	COBO	–	–	–	–	–	–	–
	14 - 23	–	CODO	DODO	–	–	–	–	–
	20 - 33	–	–	COEO	–	–	–	–	–
	30 - 50	–	–	–	–	–	–	–	–
	45 - 75	–	–	–	–	–	–	–	–
	66 - 110	–	–	–	–	–	–	–	–
	90 - 150	–	–	–	–	–	–	–	–
415	6.0 - 10	DOVO	–	–	–	–	–	–	–
	9.0 - 15	DOBO	–	–	–	–	–	–	–
	14 - 23	–	DODO	–	–	–	–	–	–
	20 - 33	–	–	DOEO	–	–	–	–	–
	30 - 50	–	–	–	DOGO	–	–	–	–
	45 - 75	–	–	–	–	DOJO	DOJO	–	–
	66 - 110	–	–	–	–	–	–	DOKO	–
	90 - 150	–	–	–	–	–	–	–	DOMO

*** Note:** These are the standard combinations of relay and contactor. Any other combinations can be supplied on request.

Overall Dimensions

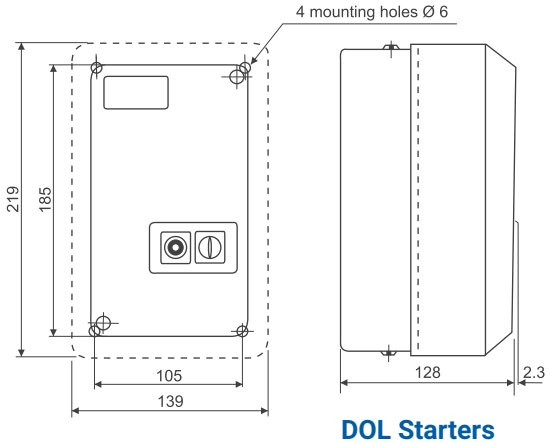

DOL Starters
MN 16, MN 25, MN 32

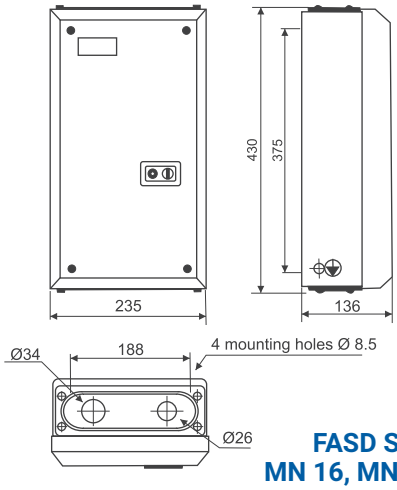

FASD Starters
MN 16, MN 25, MN 32

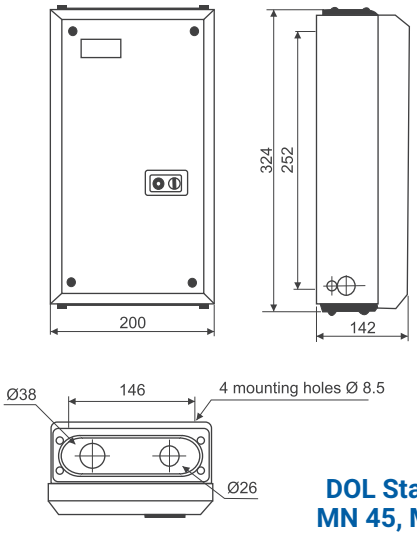

DOL Starters
MN 45, MN 65

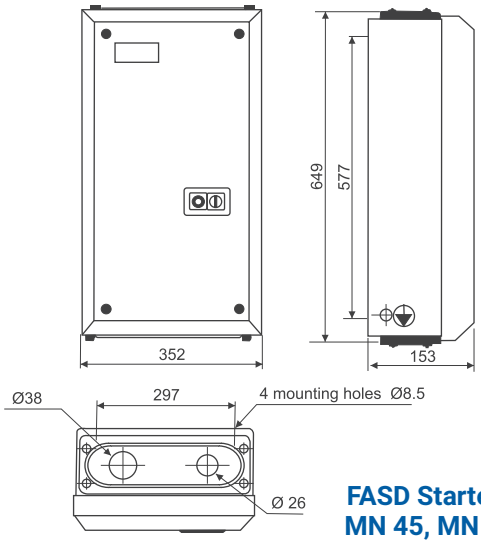

FASD Starters
MN 45, MN 65

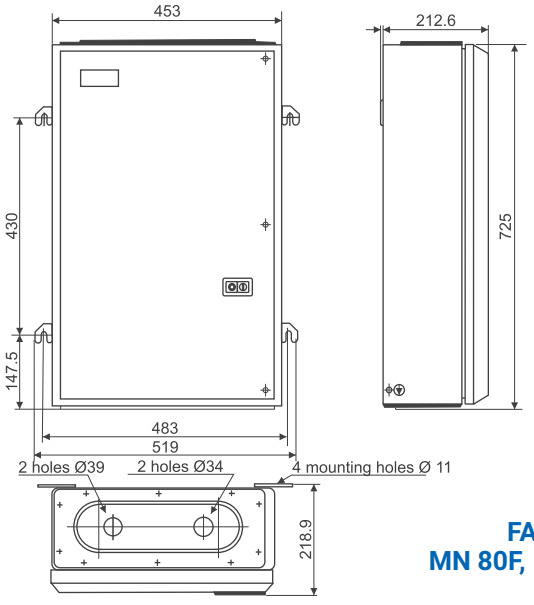

FASD Starters
MN 80F, MN 110F, MN 140F

All dimensions in mm.

Glossary

Altitude	The height (above the sea level) of the site where the equipment is located.
Ambient Temperature	Air temperature surrounding the equipment.
Auxiliary Circuit	All the conducting parts of a contactor, intended to be included in a circuit different from the main circuit and the control circuit of the contactor e.g. signalization, interlocking circuits etc.
Control Circuit	Circuit used for the closing operation and opening operation of the contactor.
Main Circuit	Main contact system.
Limits of operation	Minimum and maximum coil operating limits, which are expressed as a percentage of the rated control circuit voltage.
Electrical Endurance	Number of on-load operating cycles (i.e. with current on the main contacts) contactor can achieve. It might be different for different utilization categories.
Mechanical Endurance	Number of off-load operating cycles (i.e. without current on the main contacts) a contactor can achieve.
Inching	Energizing a motor once or repeatedly for short periods to obtain small movements of the driven mechanism.
Plugging	Plugging is defined as a system of braking, in which the motor connections are reversed so that the motor develops a counter torque, which acts as a retarding force. Plugging controls provide for the rapid stop and quick reversal of motor rotation.
Rated breaking capacity	The RMS value of current that contactor can break without damage to the contactor.
Rated making capacity	The peak value of current that contactor can make without damage to the contactor.

Glossary

Rated control circuit voltage Uc	Control voltage value for which the coil of the contactor is designed.
Rated insulation voltage Ui	The highest operating voltage that will not cause a dielectric strength failure. It is used as a parameter for dielectric strength tests and for the creepage distance.
Rated impulse with stand voltage Uimp	It is the maximum voltage impulse which the product can withstand without failing.
Rated operating voltage Ue	Voltage value to which utilization characteristics of the contactor are referred, i.e. phase to phase voltage in 3 phase circuits.
Rated operating current Ie	Current value stated by the manufacturer and taking into account the rated operating voltage Ue, the rated frequency, the rated duty, the utilization category, the electrical contact life and the type of the protective enclosure.
Conventional thermal current Ith	Value of current the contactor can withstand with poles in closed position, in free air for an eight hour duty, without the temperature rise of its various parts exceeding the imits specified by the standards.
Permissible Short Time ratings	Value of current which the contactor can withstand in closed position for a short time period and within specified conditions.
Switching frequency	Number of operating cycles per hour.
Pick Up VA	Load of the coil in VA at the moment when the supply is given to the coil, till the time the contacts of the contactor close.
Hold On VA	It is the continuous load of the coil in VA, after the contacts are closed.
Closing time	Time between energization of the coil until the moment the contacts of the first current path to be closed actually close.
Opening time	Time from the beginning of state causing breaking until the moment when the contacts of the last current path to be opened are open.
Mounting Positions	Stated by the manufacturer. Please note restrictions when applicable.

Electrical Standard Products (ESP) Offices

HEAD OFFICE

Lauritz Knudsen Electrical & Automation, A/600, Shil-Mahape Road, TTC Industrial Area, MIDC Thane, Navi Mumbai, 400 710, Maharashtra.
Tel: 022-6722 6300 | **Fax:** 022-6705 1112 | **e-mail:** CIC@LK-EA.com

BRANCH OFFICES

Lauritz Knudsen Electrical & Automation
C-201, The First Commercial Complex,
B/S Keshavbaug Party Plot, Vastrapur,
Ahmedabad - 380 015
Phone No: 022-6932 7800
e-mail: CIC@LK-EA.com

Lauritz Knudsen Electrical & Automation
Shri Daneshwari, 1st Floor,
Plot No. 17, 2nd Cross, Near Old Income
Tax Office Road, Vidyanagar,
Hubballi - 580 021
Phone No: 022-6932 7800
e-mail: CIC@LK-EA.com

Lauritz Knudsen Electrical & Automation
No.10, Fortuna Towers, 2nd Floor,
Rana Pratap Marg, Near NBRI,
Lucknow - 226 001
Phone No: 022-6932 7800
e-mail: CIC@LK-EA.com

Lauritz Knudsen Electrical & Automation
A06/A07, Second Floor,
Grand Chandra Complex, Frazer Road
Patna - 800 001
Phone No: 022-6932 7800
e-mail: CIC@LK-EA.com

Lauritz Knudsen Electrical & Automation
Wework Central, #36 Infantry Road,
Bengaluru - 560 001
Phone No: 022-6932 7800
e-mail: CIC@LK-EA.com

Lauritz Knudsen Electrical & Automation
AWFIS Space Solutions, Prestige Phoenix,
4th floor, 1405, Umanagar, Begumpet,
Hyderabad - 500 016
Phone No: 022-6932 7800
e-mail: CIC@LK-EA.com

Lauritz Knudsen Electrical & Automation
El Dorado Building, 3rd Floor, 6,
Venkatraman Street, Chinna Chokkikulam,
Madurai - 625 002
Phone No: 022-6932 7800
e-mail: CIC@LK-EA.com

Lauritz Knudsen Electrical & Automation
UrbanWrk, 5th Floor, Sai Radhe,
Raja Bahadur Mill Road, Behind Hotel
Grand Sheraton, Sangamwadi
Pune - 411 001
Phone No: 022-6932 7800
e-mail: CIC@LK-EA.com

Lauritz Knudsen Electrical & Automation
Under O Launchpad, 4th Floor,
Unit-434, Esplanade 1, Rasulgarh,
Bhubaneswar - 751 010
Phone No: 022-6932 7800
e-mail: CIC@LK-EA.com

Lauritz Knudsen Electrical & Automation
Workie, 214 - 2nd Floor,
Apollo Premier, PU-4,
Scheme No. 54, Vijay Nagar Square,
Indore - 452 010
Phone No: 022-6932 7800
e-mail: CIC@LK-EA.com

Lauritz Knudsen Electrical & Automation
Bestech Business Park,
Tower - A, 2nd floor, Sector - 66
Mohali - 160059
Phone No: 022-6932 7800
e-mail: CIC@LK-EA.com

Lauritz Knudsen Electrical & Automation
Office No. 211 & 212, Pithalia Plaza,
KK Road, Near Fafadih Chowk,
Raipur - 492 001
Phone No: 022-6932 7800
e-mail: CIC@LK-EA.com

Lauritz Knudsen Electrical & Automation,
801 Word Level-8, No. 28,
SIDCO Industrial Estate, Guindy,
Chennai - 600 032
Phone No: 022-6932 7800
e-mail: CIC@LK-EA.com

Lauritz Knudsen Electrical & Automation
Office No. 430, 4th Floor,
Jaipur Electronic Market, Riddhi Siddhi,
Gopalpura Bypass,
Jaipur - 302 018
Phone No: 022-6932 7800
e-mail: CIC@LK-EA.com

Lauritz Knudsen Electrical & Automation
TC II, Tower B, PRIMA BAY Gate No. 5,
Saki Vihar Road Powai,
Mumbai - 400 072
Phone No: 022-6932 7800
e-mail: CIC@LK-EA.com

Lauritz Knudsen Electrical & Automation,
DevX 4th Floor, A Wing, Om 9 Square,
150 Ft Ring Road, Near Nana Mava Circle,
Opp Silver Heights,
Rajkot - 360 001
Phone No: 022-6932 7800
e-mail: CIC@LK-EA.com

Lauritz Knudsen Electrical & Automation
Playworkz Coworking Space
43 & 44, 3rd Cross,
Bharathy Colony, Peelamedu,
Coimbatore - 641 004
Phone No: 022-6932 7800
e-mail: CIC@LK-EA.com

Lauritz Knudsen Electrical & Automation
GDR Siddha, Ground Floor, N Road
Bistupur, Opposite St. Mary's Church,
Jamshedpur - 831 001
Phone No: 022-6932 7800
e-mail: CIC@LK-EA.com

Lauritz Knudsen Electrical & Automation
Unnati Building, 2nd Floor,
Automation Campus, A-600, TTC Industrial
Area Shil-Mahape Road, Mahape,
Navi Mumbai - 400 710
Phone No: 022-6932 7800
e-mail: CIC@LK-EA.com

Lauritz Knudsen Electrical & Automation
10th Floor, Titaanium Business,
Bhimrad Road, Althan
Surat - 395 017
Phone No: 022-6932 7800
e-mail: CIC@LK-EA.com

Lauritz Knudsen Electrical & Automation
3rd Floor, 1&2 Vijay Park,
Main Chakrata Road, Opp. Anandam,
Near Ballupur chowk,
Dehradun - 248 001
Phone No: 022-6932 7800
e-mail: CIC@LK-EA.com

Lauritz Knudsen Electrical & Automation
Business Communication Centre
2nd Floor, Chiramel Chambers,
Kurisupally Road, Ravipuram,
Kochi - 682 015
Phone No: 022-6932 7800
e-mail: CIC@LK-EA.com

Lauritz Knudsen Electrical & Automation
M1 & M2, Mezzanine Floor,
Himalaya Excellency,
Plot No. C-47, Pratap Nagar Square,
Nagpur - 440 022
Phone No: 022-6932 7800
e-mail: CIC@LK-EA.com

Lauritz Knudsen Electrical & Automation
11th Floor, Block-D, Notus IT Park,
Sarabhai Campus, Bhailal Amin Marg,
Vadodara - 390 023
Phone No: 022-6932 7800
e-mail: CIC@LK-EA.com

Lauritz Knudsen Electrical & Automation
Ground Floor, B-27,
Biplab Rashbihari Sarani,
Sector 2A, Bidhan Nagar,
Durgapur - 713 212
Phone No: 022-6932 7800
e-mail: CIC@LK-EA.com

Lauritz & Knudsen Electrical & Automation,
207, 2nd floor, Revolution Complex,
Station Road, E Ward,
Next to Pedestrian Bridge,
Kolhapur - 416 001
Phone No: 022-6932 7800
e-mail: CIC@LK-EA.com

Lauritz Knudsen Electrical & Automation,
3rd floor, Uttam Tower by Viraj Estate,
Sharanpur Road,
Nasik - 422 002
Phone No: 022-6932 7800
e-mail: CIC@LK-EA.com

Lauritz Knudsen Electrical & Automation
Naga Chambers, 3rd Floor, D/No. 12-1-16,
Plot No. 49, Survey No. 1051, Waltair Main Road,
Visakhapatnam - 530 002
Phone No: 022-6932 7800
e-mail: CIC@LK-EA.com

Lauritz Knudsen Electrical & Automation
6th Floor, Exotica Greens, A Block, 191,
R G Baruah Road, Guwahati Central,
Guwahati - 781 005
Phone No: 022-6932 7800
e-mail: CIC@LK-EA.com

Lauritz Knudsen Electrical & Automation
2nd Floor, BN3, Salt Lake, Sector-V,
Kolkata - 700 091
Phone No: 022-6932 7800
e-mail: CIC@LK-EA.com

Lauritz Knudsen Electrical & Automation
A-25, 1st Floor, Imperia Complex,
Mohan Corporative Industrial Estate,
Near Sarita Vihar Metro Station,
Mathura Road,
New Delhi - 110 044
Phone no: 022-6932 7800
e-mail: CIC@LK-EA.com

Product improvement is a continuous process. For the latest information and special application, please contact any of our offices listed here. Product photographs shown for representative purpose only.

Lauritz Knudsen
Electrical & Automation

Lauritz Knudsen Electrical & Automation, Electrical Standard Product
A/600, Shil-Mahape Road, TTC Industrial Area, MIDC Thane, Navi Mumbai, 400 710,
Maharashtra, Phone No: 022-6722 6300 | Web: www.LK-EA.com

Customer Interaction Center (CIC)
Phone no: 022-6932 7800
Web: www.LK-EA.com | e-mail: CIC@LK-EA.com